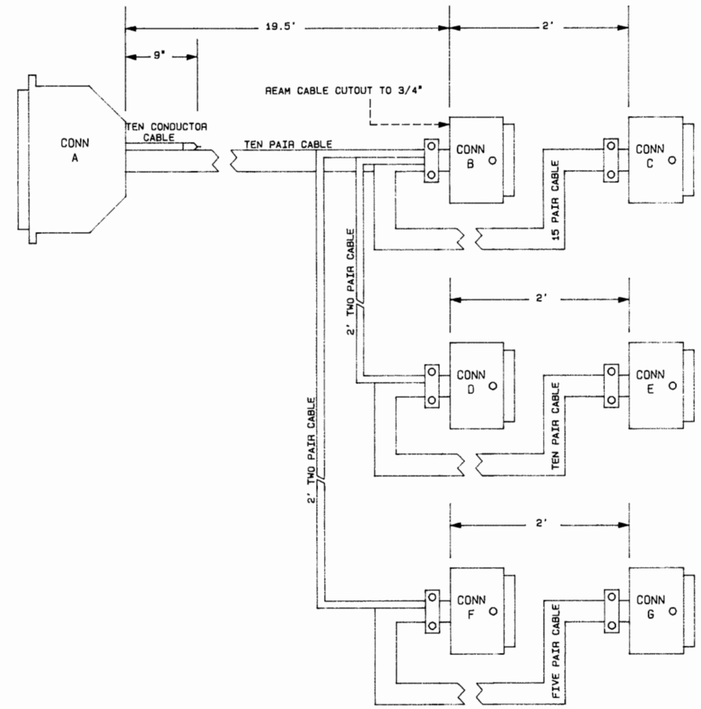

INTERCONNECTION DIAGRAM

CONN A PIN	CONN A	CONN B PIN	CONN B	CONN C PIN	CONN D PIN	CONN D	CONN E PIN	CONN E	CONN F PIN	CONN F	CONN G PIN	CONN G
1	BLK (BAN)	20	BLK (BAN)	20	10	BLK (BAN)	10		8	RED (BLK)	8	
	SHIELD		SHIELD		SHIELD	SHIELD			SHIELD	SHIELD		
2	BAN (BLK)	NC			12	BAN (BLK)	12		1	BLK (WHT)	1	
3	BLK (RED)	11	BLK (RED)	11	1	BLK (WHT)	1		2	WHT (BLK)	2	
37	RED (BLK)	12	RED (BLK)	12	2	WHT (BLK)	2		3	BLK (GRN)	3	
6	BLK (ORG)	19	BLK (ORG)	19	3	BLK (GRN)	3		4	GRN (BLK)	4	
23	ORG (BLK)	1	ORG (BLK)	1	4	GRN (BLK)	4		5	BLK (BLU)	5	
7	BLK (YEL)	10	BLK (YEL)	10	5	BLK (BLU)	5		6	BLU (BLK)	6	
24	YEL (BLK)	9	YEL (BLK)	9	8	BLU (BLK)	8		7	BLK (YEL)	7	
8	BLK (GRN)	8	BLK (GRN)	8					10	YEL (BLK)	10	
42	GRN (BLK)				BLK (RED) 6	BLK (RED)	6					
31	BLK (BLU)							BLK (RED)		BLK (RED)	9	
26	BLU (BLK)				RED (BLK) 7	RED (BLK)	7					
40	BLK (WHT)	13	BLK (WHT)	13								
14	WHT (BLK)							RED (BLK)	9			
12	RED (GRN)	NC	WHT (BLK)	2	9	BLK (YEL)	9					
	GRN (RED)	3	GRN (BLK)	3	11	YEL (BLK)	11					
		4	BLK (BLU)	4		BLK (ORG)						
		5	BLU (BLK)	5		ORG (BLK)						
4	VIOLET	6	BAN (BLK)	6		RED (WHT)						
15		7	RED (BLU)	7		WHT (RED)						
25	RED (BLU)	14	BLU (RED)	14		RED (GRN)						
	BLU (RED)	15	RED (GRN)	15		GRN (RED)						
	WHT (RED)	16	GRN (RED)	16		RED (BLU)						
	RED (WHT)	17	RED (WHT)	17		BLU (RED)						
	PIGTAIL	18	WHT (RED)	18								
34	BLACK	21	RED (YEL)	21								
9	BROWN	22	YEL (RED)	22								
41	RED	23	RED (BAN)	23								
NC	ORANGE	24	BAN (RED)	24								
10	YELLOW		RED (ORG)									
27	GREEN		ORG (RED)									
11	BLUE		GRN (WHT)									
47	VIOLET		WHT (GRN)									
48	GREY		GRN (BLU)									
46	WHITE		BLU (GRN)									
			BLK (WHT)									
			WHT (BLK)									
										BLK (WHT)		
										WHT (BLK)		

LEGEND	
+	DENOTES PIN CONNECTION
⊕	DENOTES SPLICE

NOTE 1: REFER TO BOM #70D032-C FOR PARTS.

REV	DESCRIPTION
00A 9-26-88 AD	DWG# 20-0024-00A WAS FILE JH24.001. SOME COLOR INFO MOVED FOR CLARITY. TWO PAIR CABLE WAS THREE PAIR. CONN A. PIN 31 WAS 13. 14 WAS 30. 15 WAS 29. PINS 2 & 12 ADDED. SHIELDS ADDED.
00B 10/30/89 MC	ADDED PLAY TALLY, ADDED NEW TL P/N
C 1/8/90 BT	CHANGED DWG. #, WAS 20-0024-00A

(C) 1989 TIMELINE, INC.
270 Lafayette St.
New York, N.Y. 10012

APP'D
DETAIL: CABLE ASSEMBLY SONY/MCI JH-24
CHK'D
CONFIDENTIAL
DATE 1/8/90
DWG 70D032-10 REV C PAGE 1 OF 1 SIZE C

EASI FILE CORP. IRVINE CA

70D032-10-1
Cable Sony/MCI JH-24
Rev C

EFH 24