© Soundcraft Electronics Ltd
This drawing must not be copied, reproduced or disclosed, in part or in whole to a third party without written permission

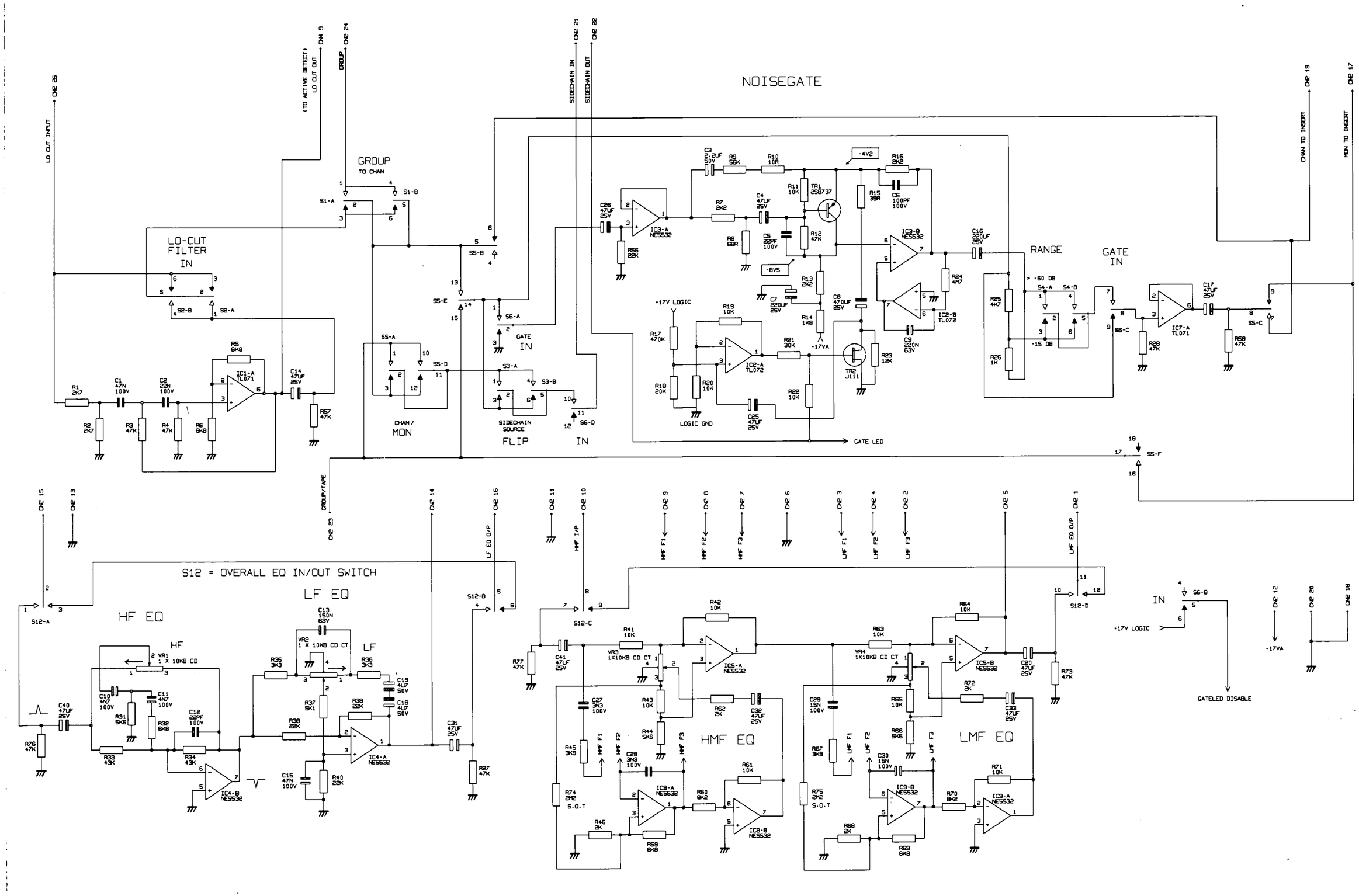

© Soundcraft Electronics Ltd
This drawing must not be copied, reproduced or disclosed, in part or in whole to a third party without written permission

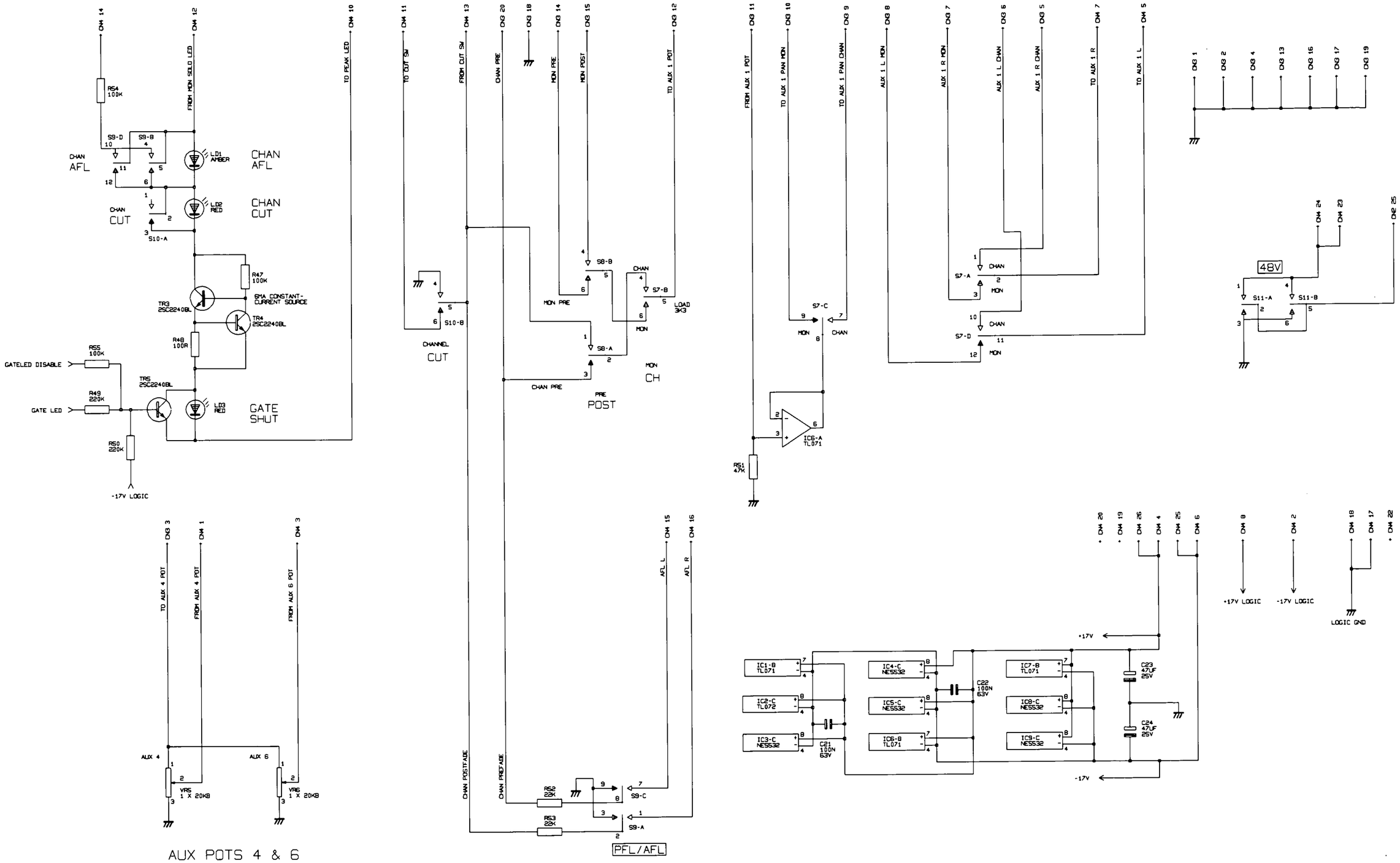

© Soundcraft Electronics Ltd
This drawing must not be copied, reproduced or disclosed, in part or in whole to a third party without written permission

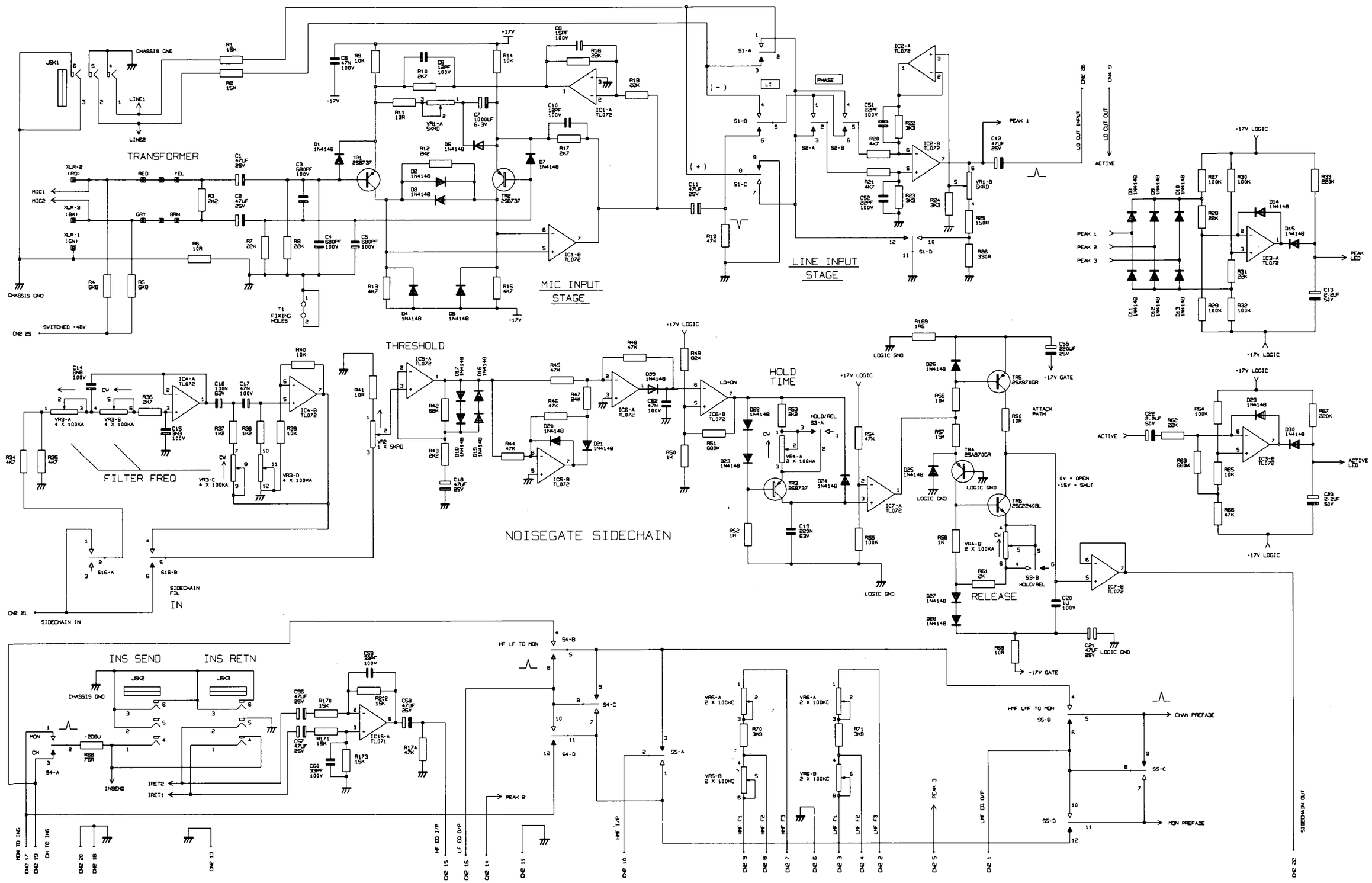

© Soundcraft Electronics Ltd
This drawing must not be copied, reproduced or disclosed, in part or in whole to a third party without written permission

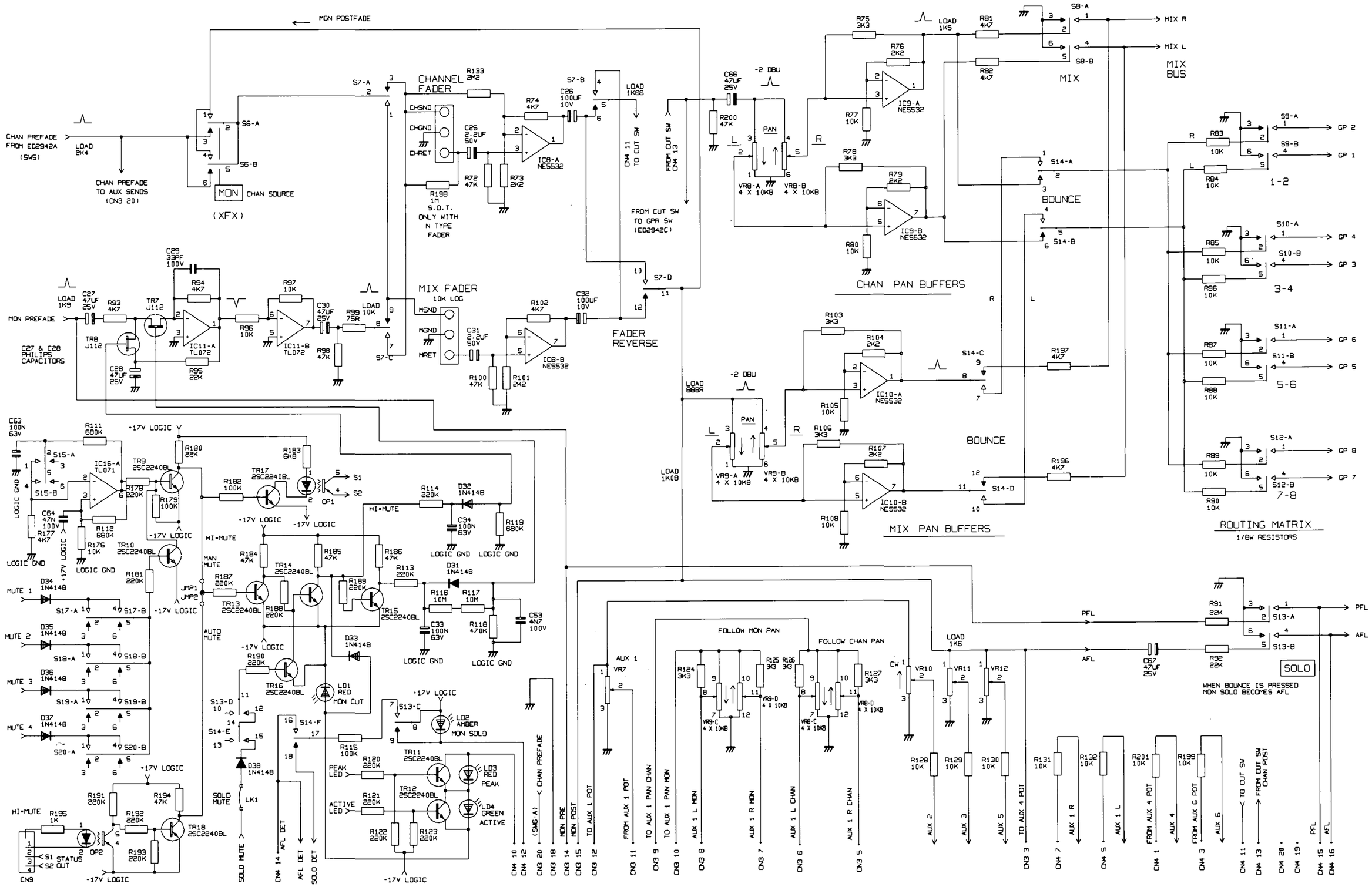

© Soundcraft Electronics Ltd
This drawing must not be copied, reproduced or disclosed, in part or in whole to a third party without written permission

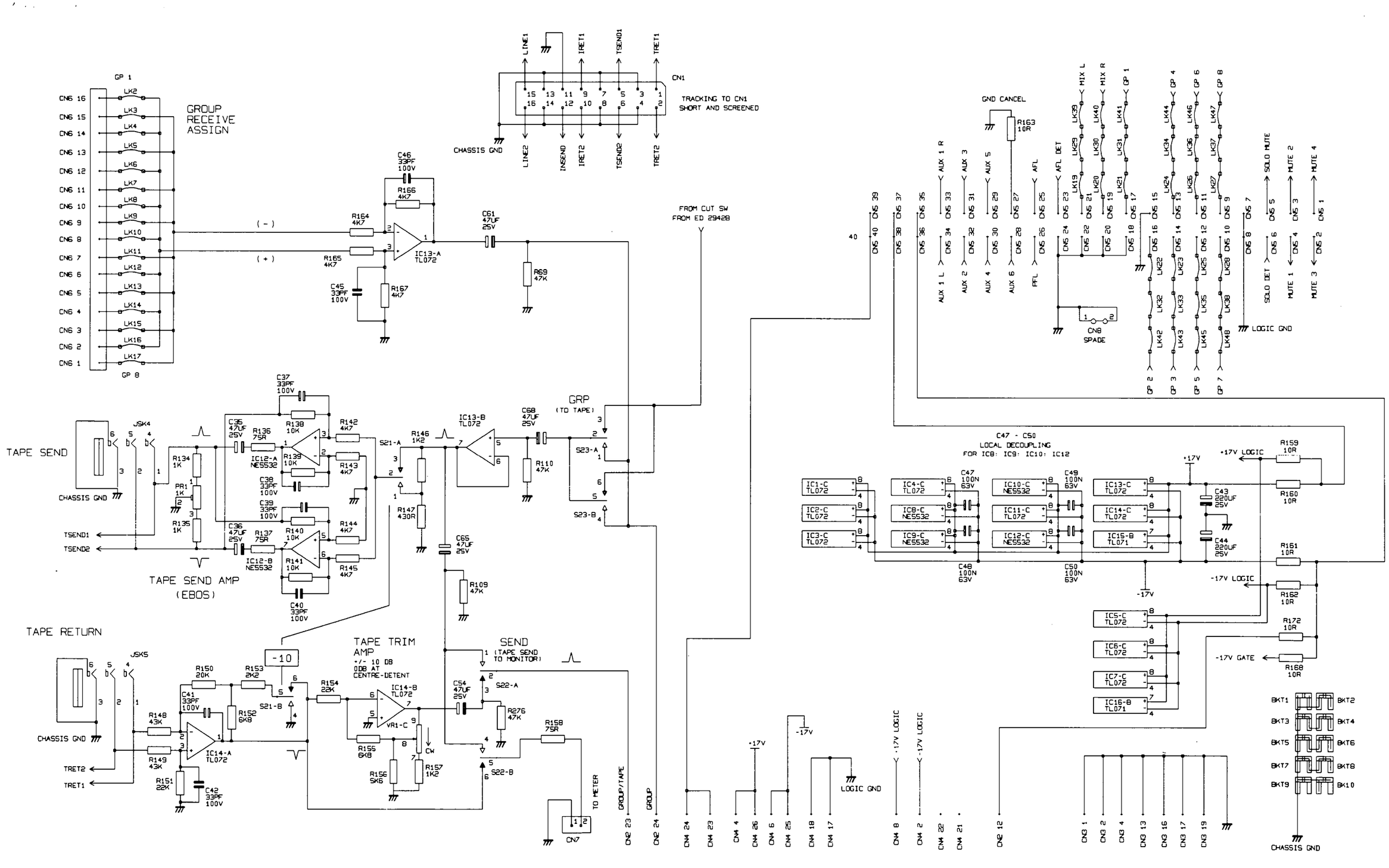

© Soundcraft Electronics Ltd
This drawing must not be copied, reproduced or disclosed, in part or in whole to a third party without written permission

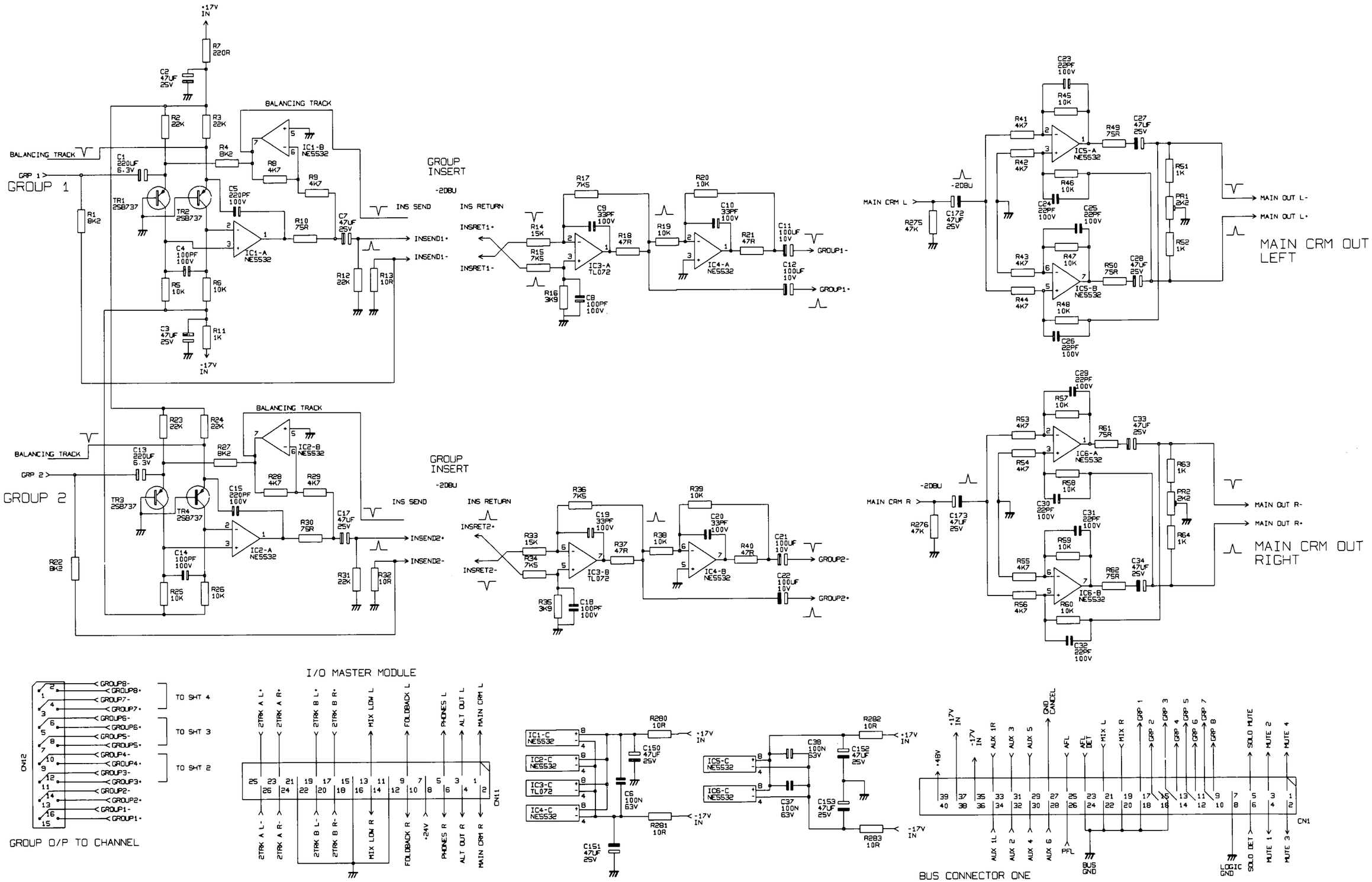

© Soundcraft Electronics Ltd
This drawing must not be copied, reproduced or disclosed, in part or in whole to a third party without written permission

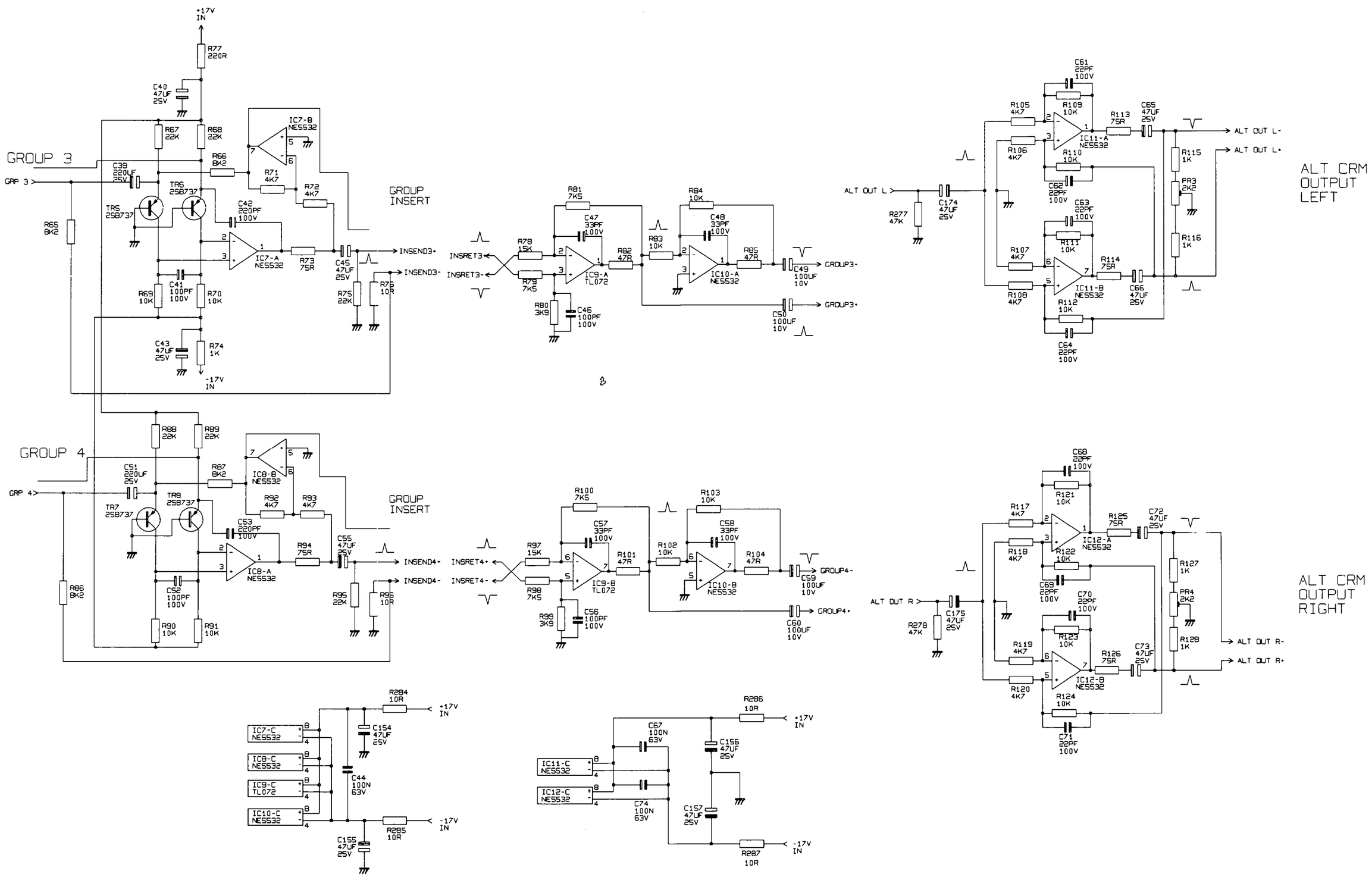

© Soundcraft Electronics Ltd
This drawing must not be copied, reproduced or disclosed, in part or in whole to a third party without written permission

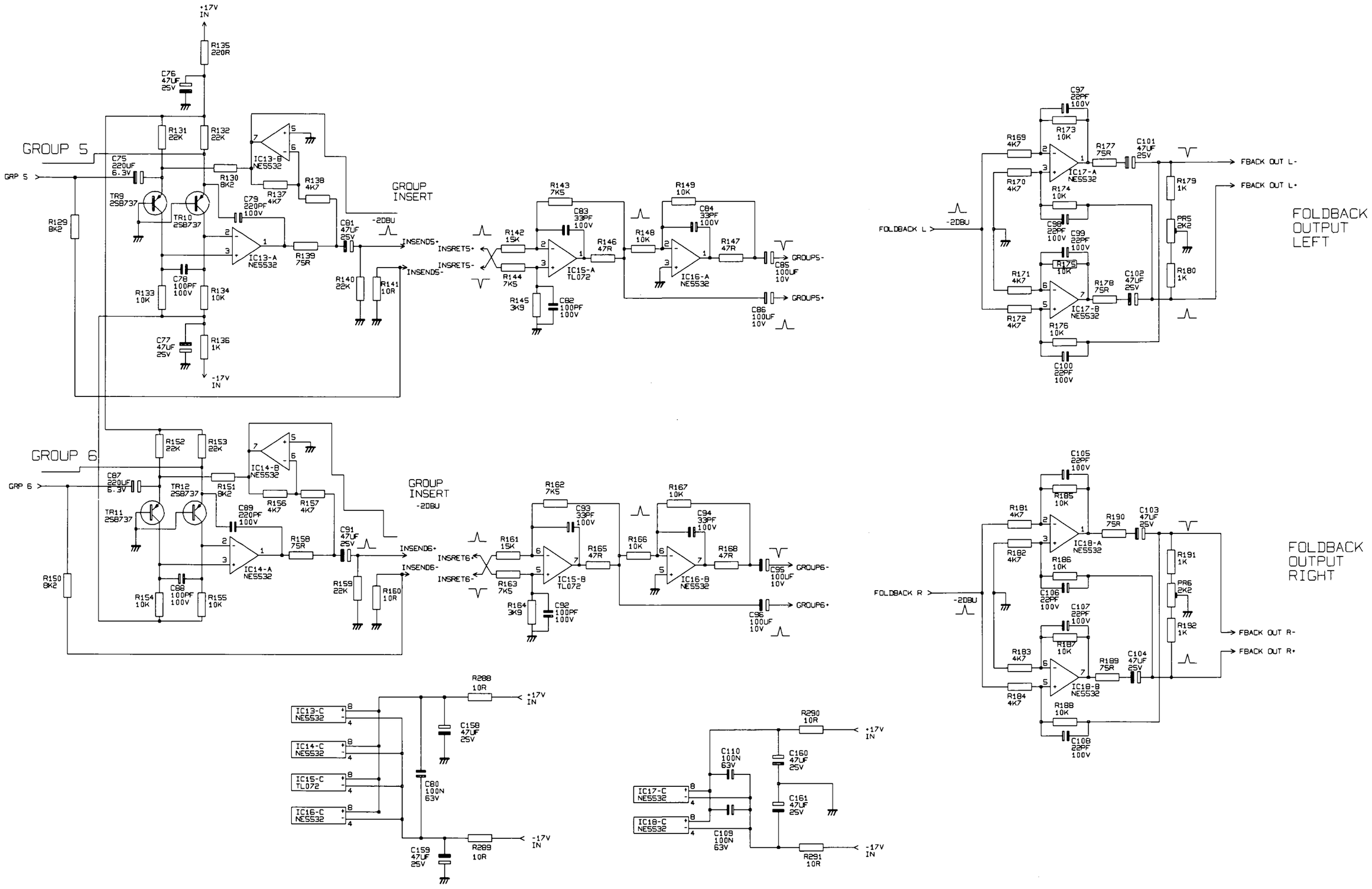

© Soundcraft Electronics Ltd
This drawing must not be copied, reproduced or disclosed, in part or in whole to a third party without written permission

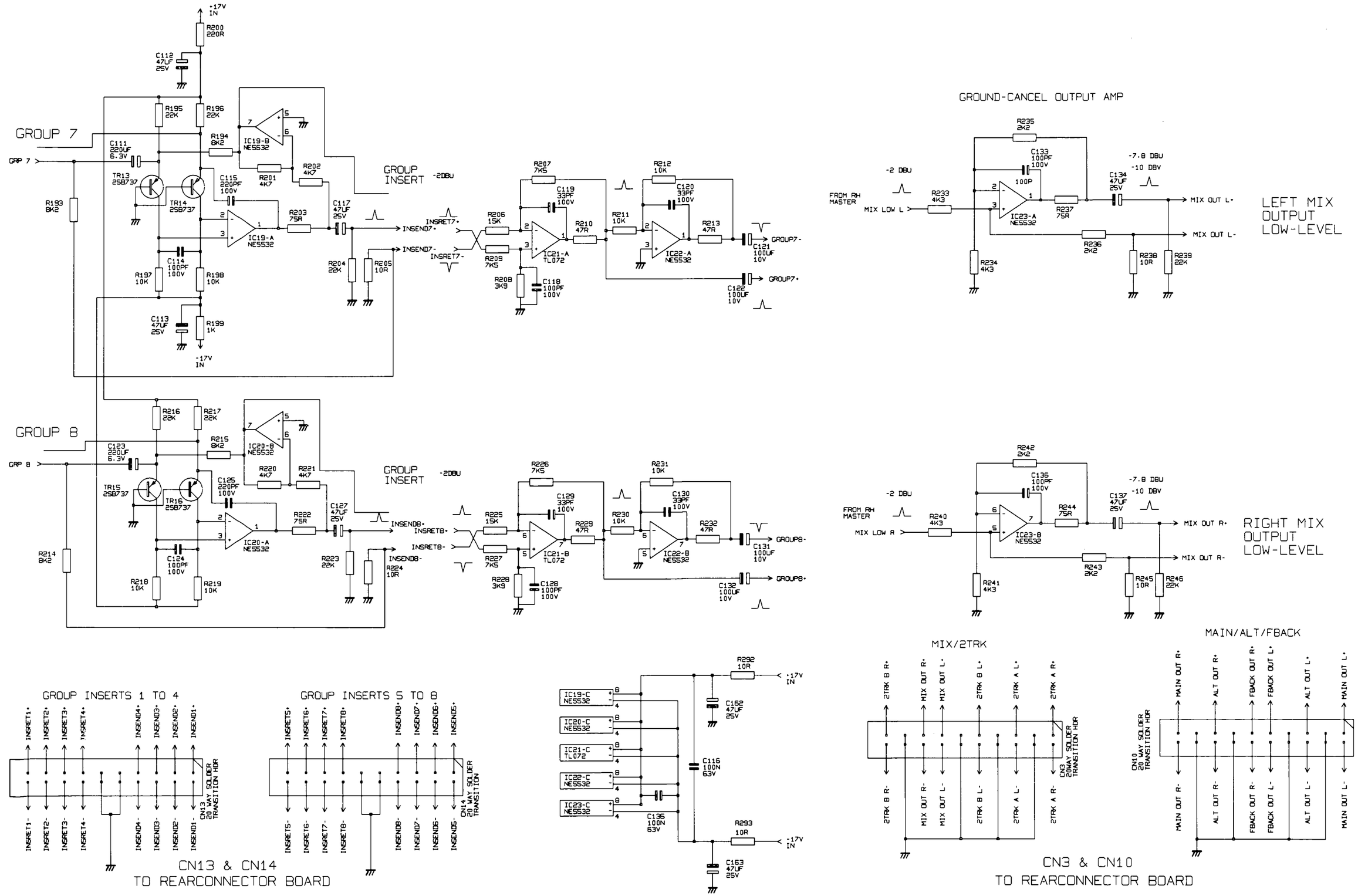

© Soundcraft Electronics Ltd
This drawing must not be copied, reproduced or disclosed, in part or in whole to a third party without written permission

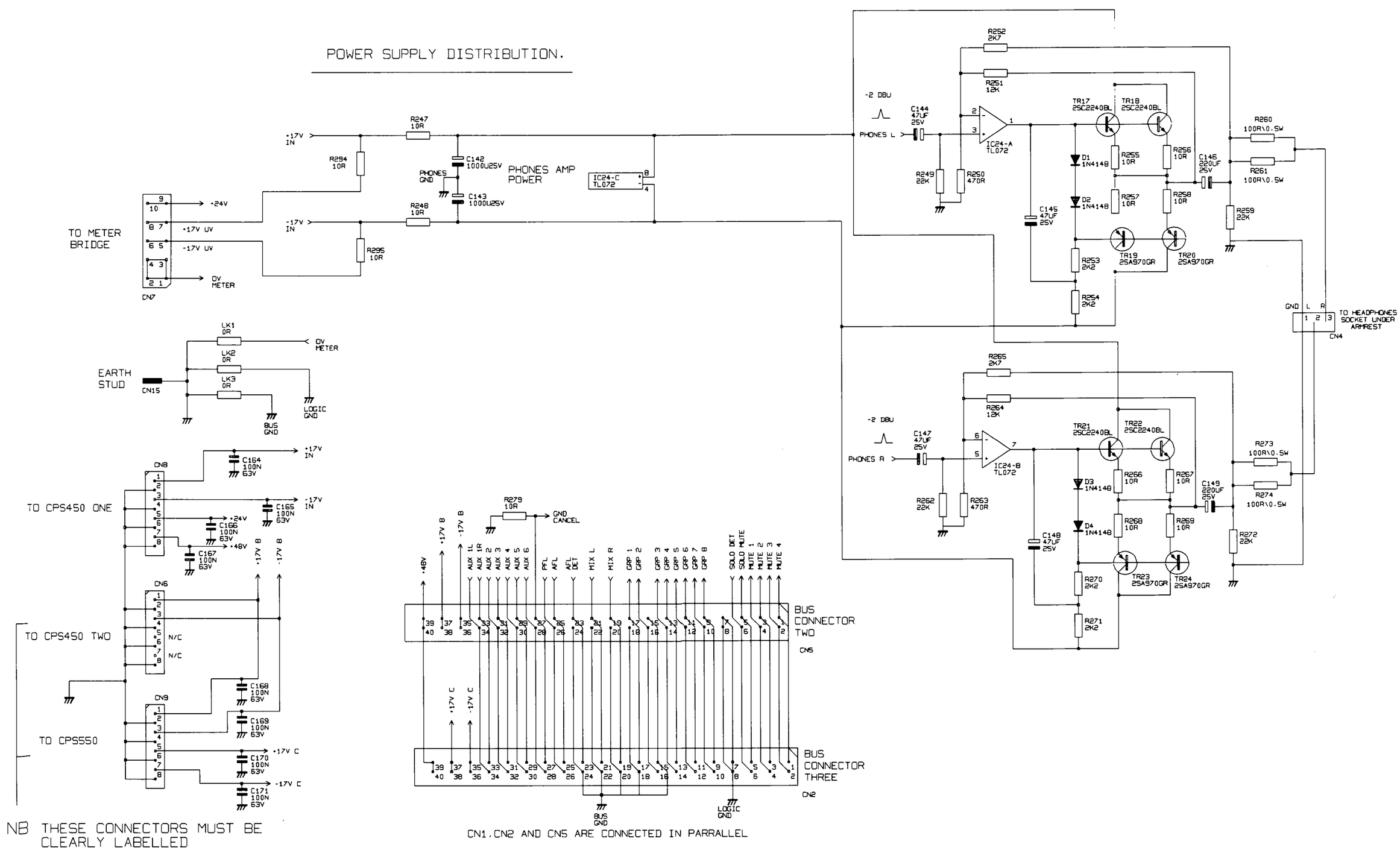

© Soundcraft Electronics Ltd
This drawing must not be copied, reproduced or disclosed, in part or in whole to a third party without written permission

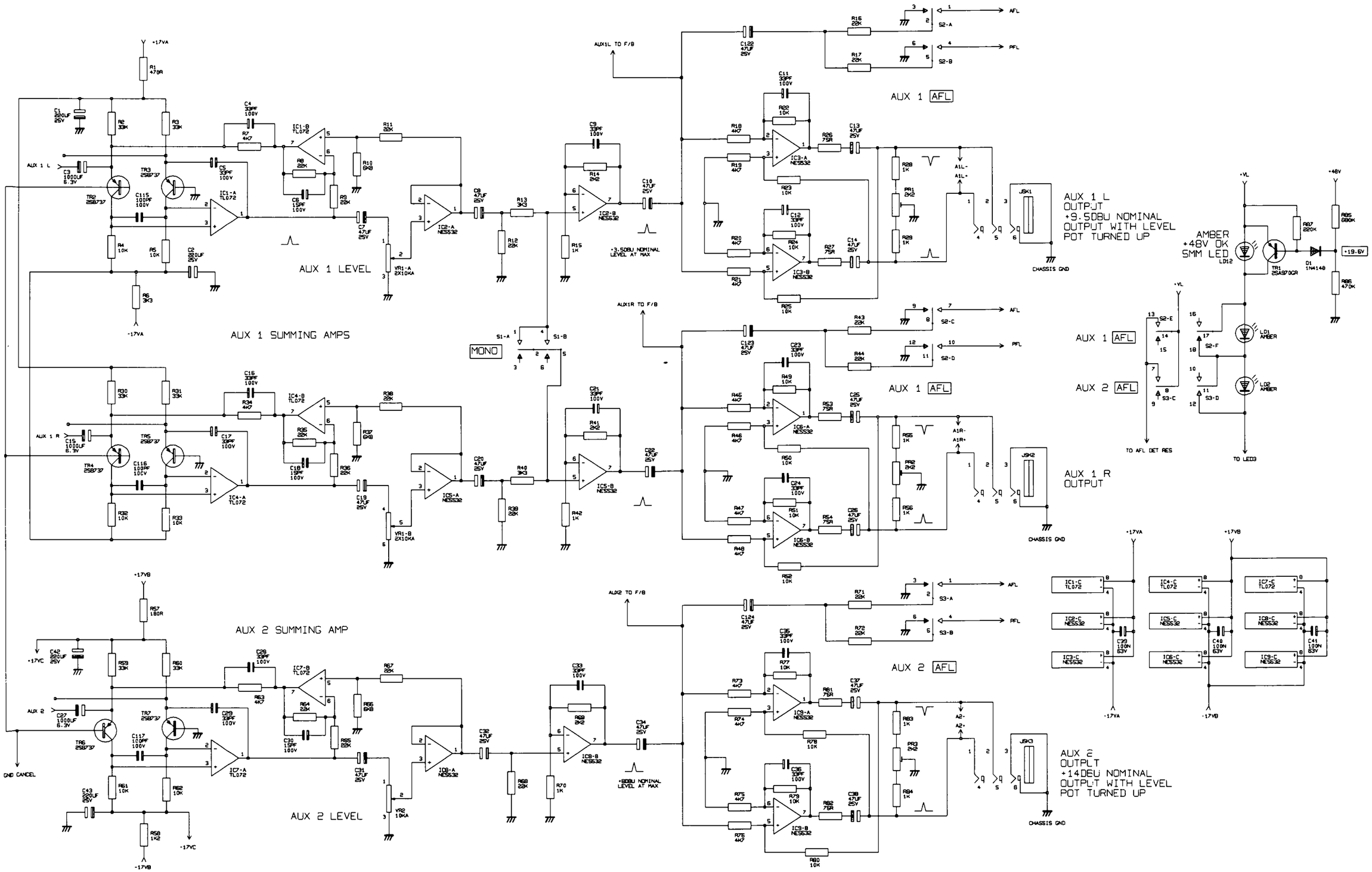

© Soundcraft Electronics Ltd
This drawing must not be copied, reproduced or disclosed, in part or in whole to a third party without written permission

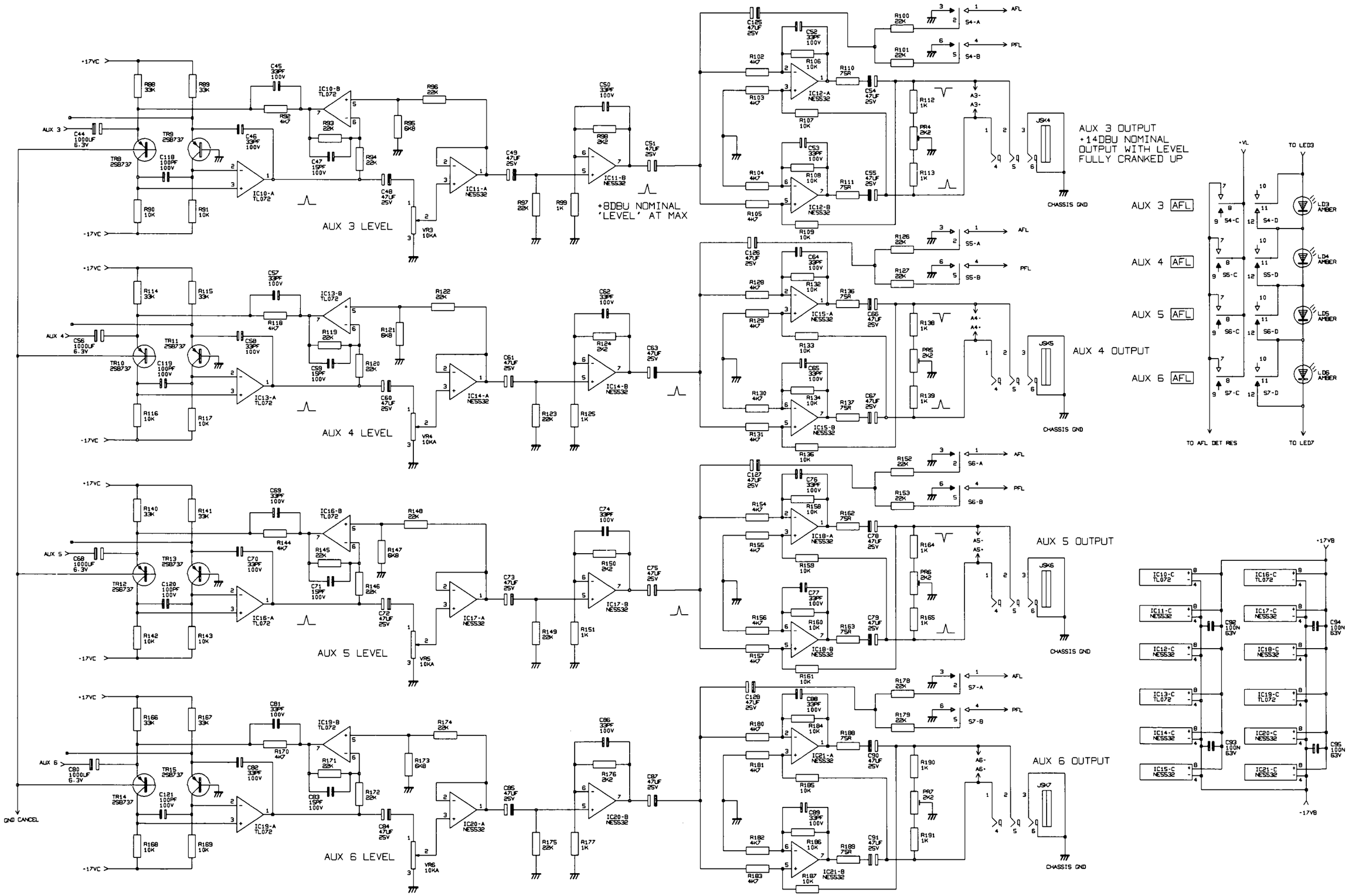

© Soundcraft Electronics Ltd
This drawing must not be copied, reproduced or disclosed, in part or in whole to a third party without written permission

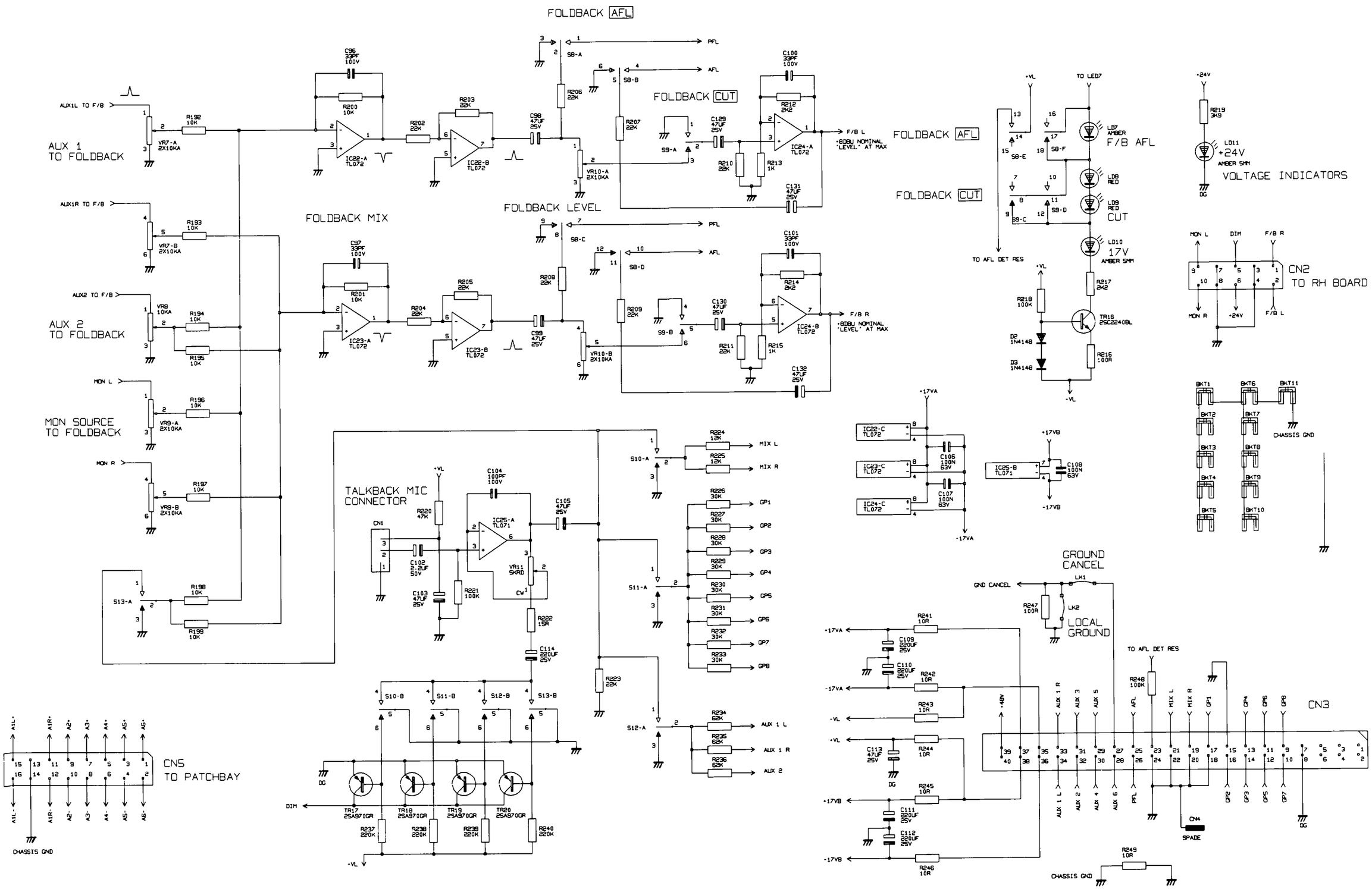

© Soundcraft Electronics Ltd
This drawing must not be copied, reproduced or disclosed, in part or in whole to a third party without written permission

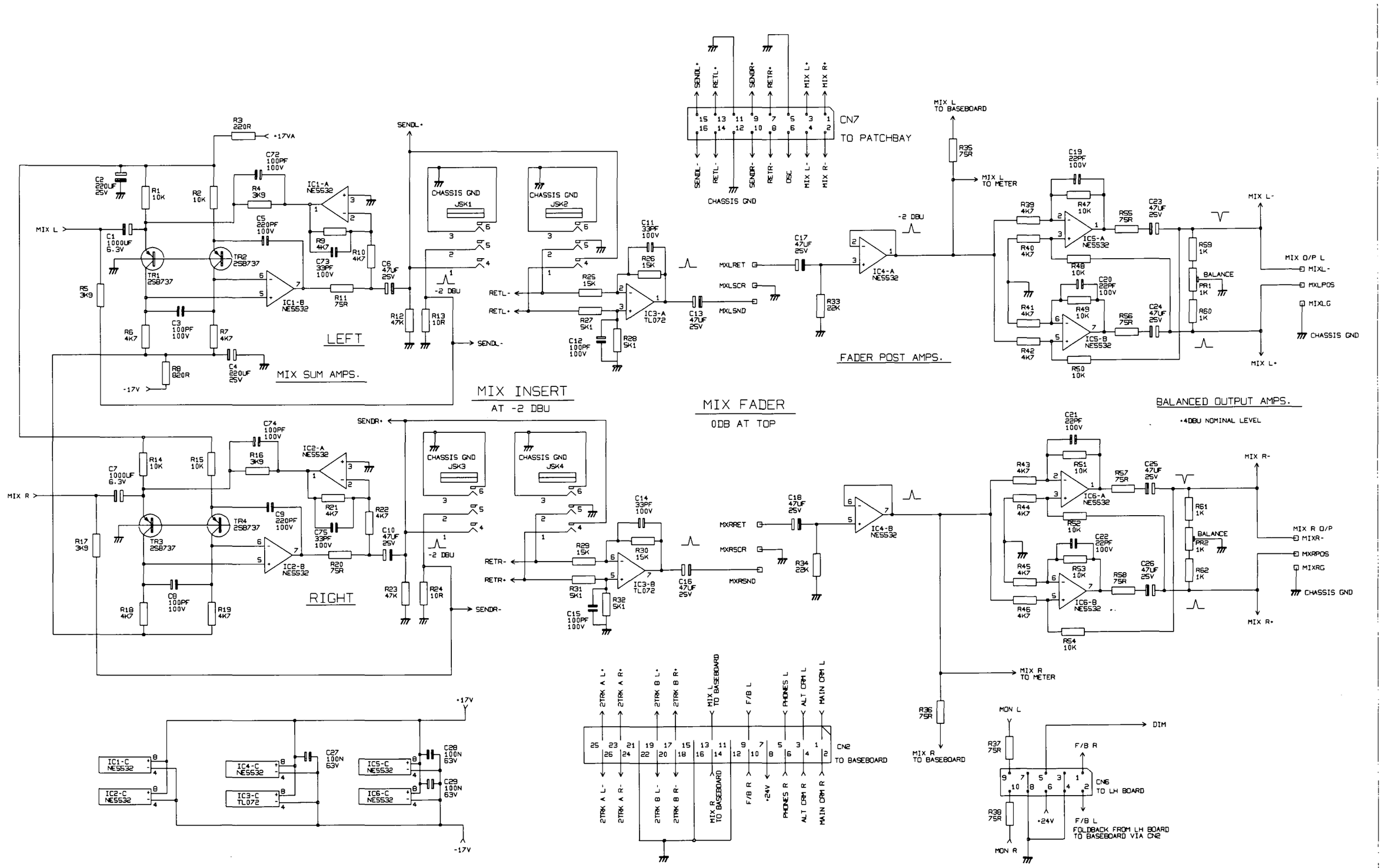

© Soundcraft Electronics Ltd
This drawing must not be copied, reproduced or disclosed, in part or in whole to a third party without written permission

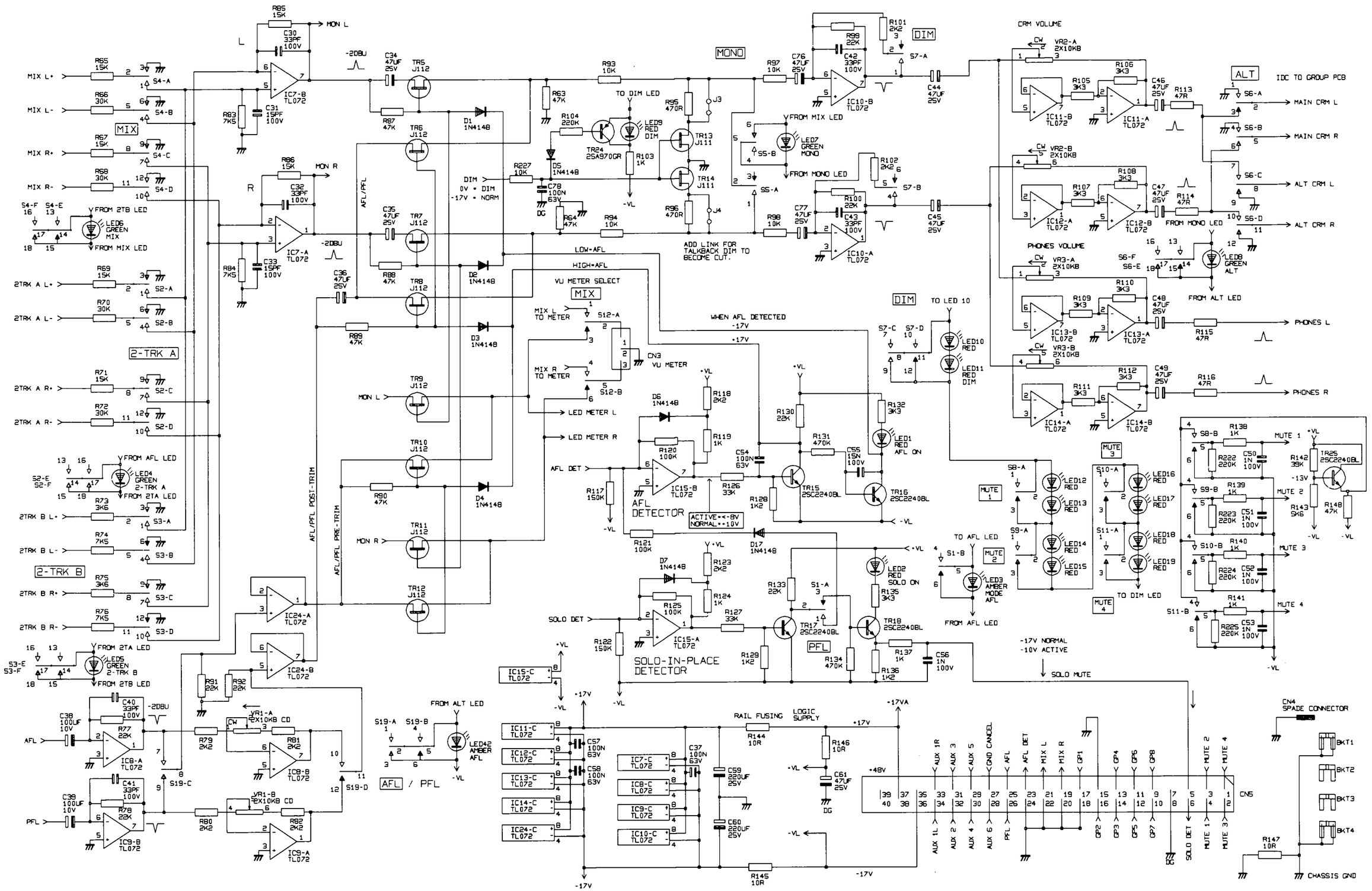

© Soundcraft Electronics Ltd
This drawing must not be copied, reproduced or disclosed, in part or in whole to a third party without written permission

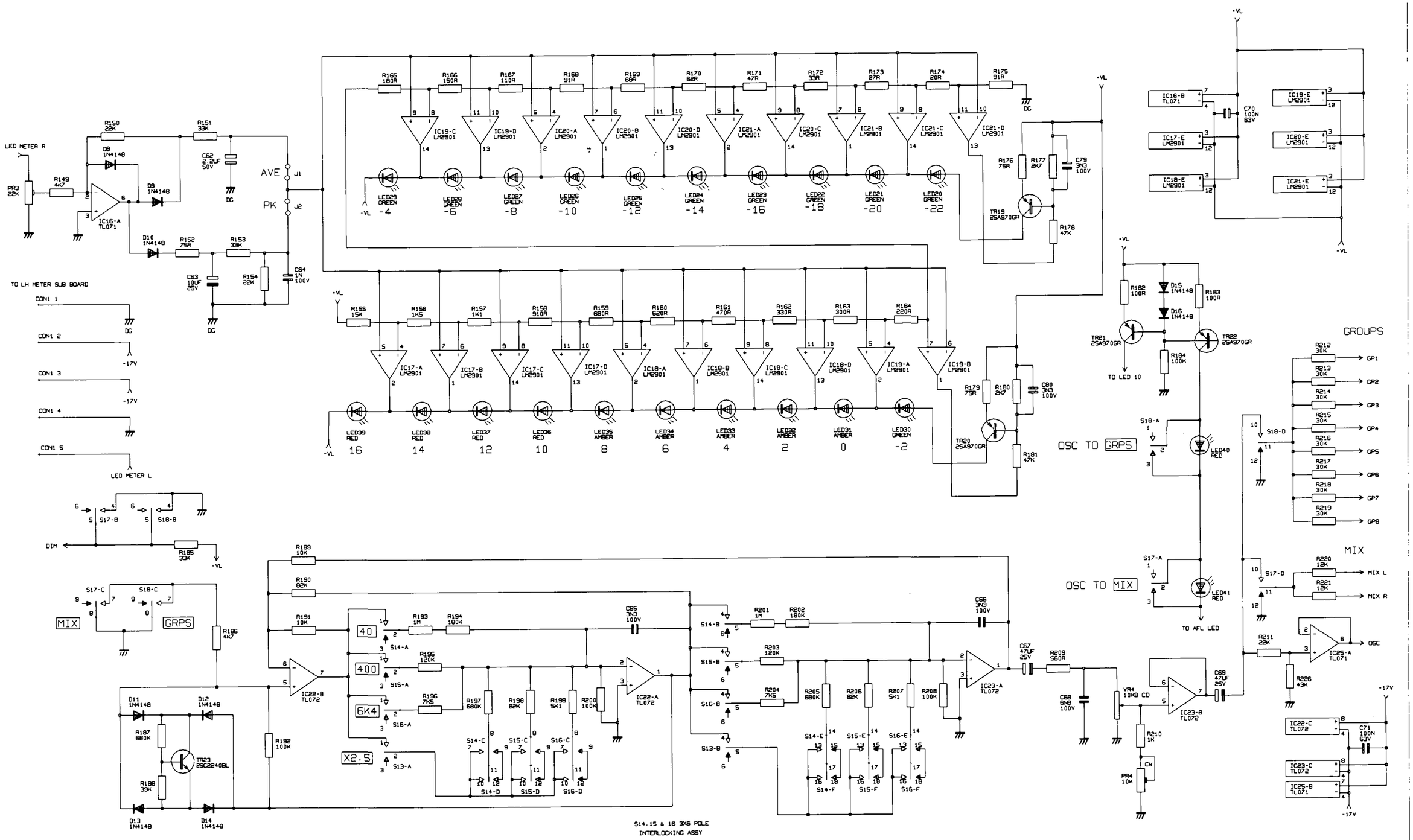

© Soundcraft Electronics Ltd
This drawing must not be copied, reproduced or disclosed, in part or in whole to a third party without written permission

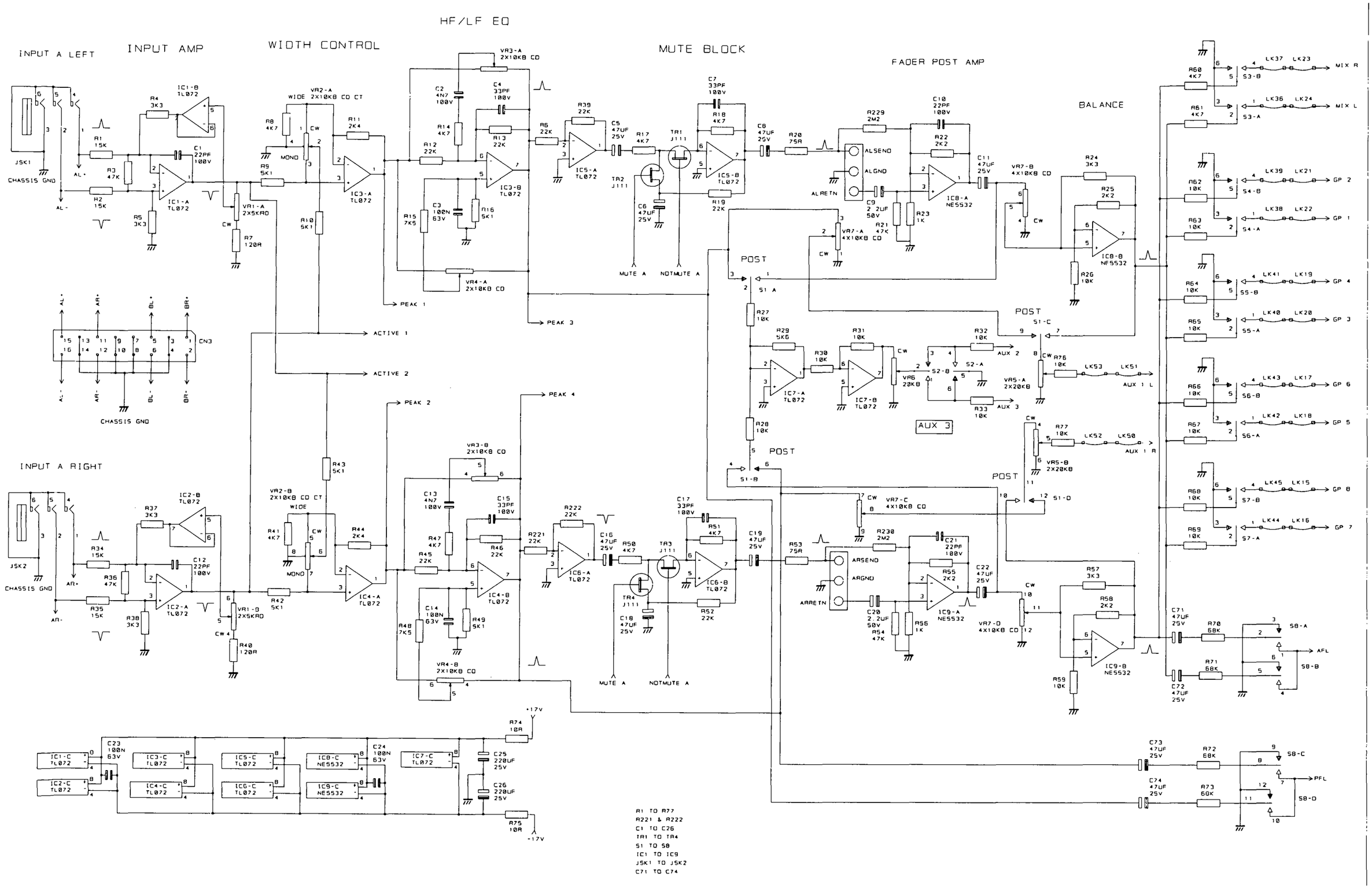

© Soundcraft Electronics Ltd
This drawing must not be copied, reproduced or disclosed, in part or in whole to a third party without written permission

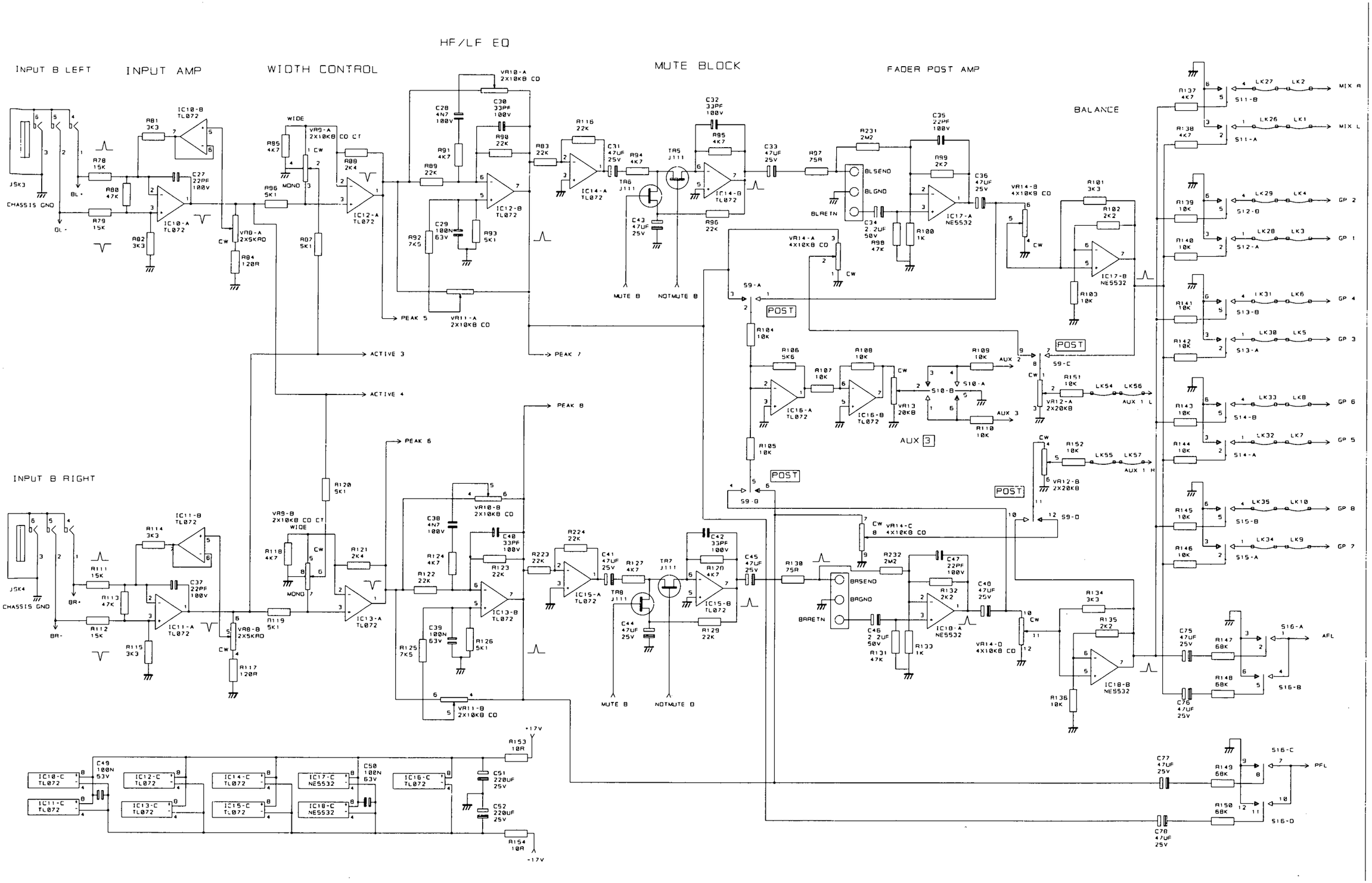

© Soundcraft Electronics Ltd
This drawing must not be copied, reproduced or disclosed, in part or in whole to a third party without written permission

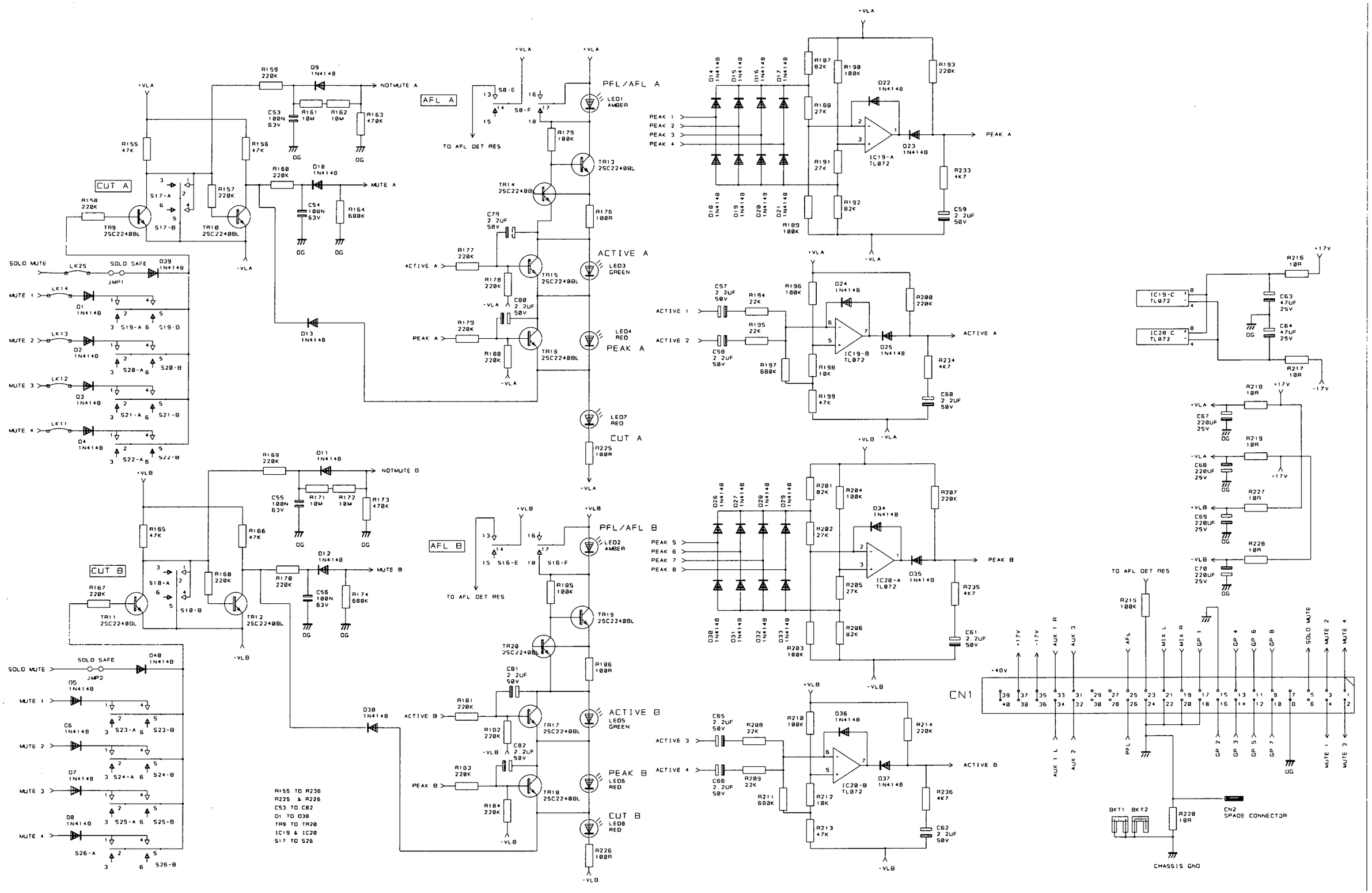

© Soundcraft Electronics Ltd
This drawing must not be copied, reproduced or disclosed, in part or in whole to a third party without written permission

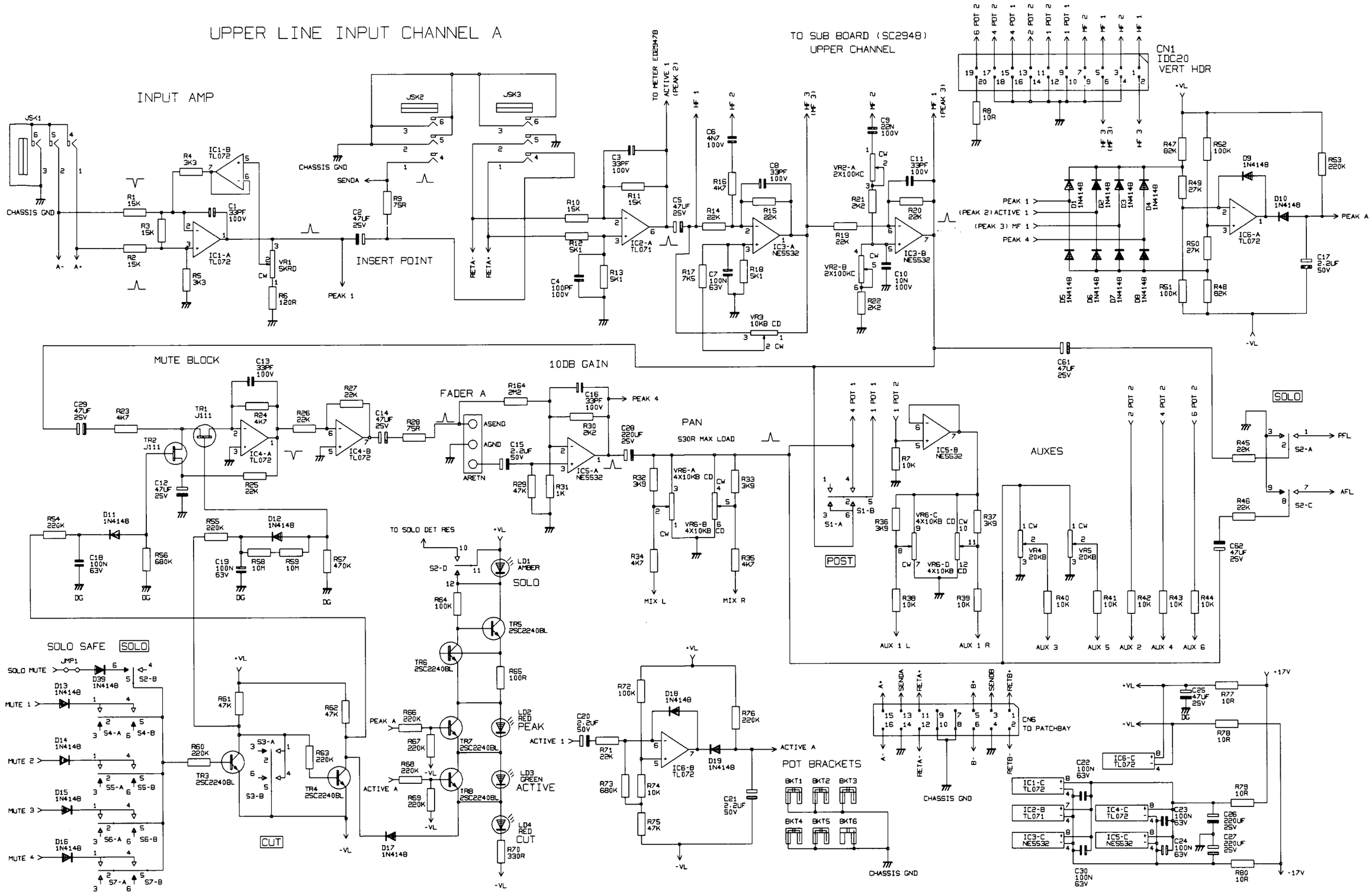

© Soundcraft Electronics Ltd
This drawing must not be copied, reproduced or disclosed, in part or in whole to a third party without written permission

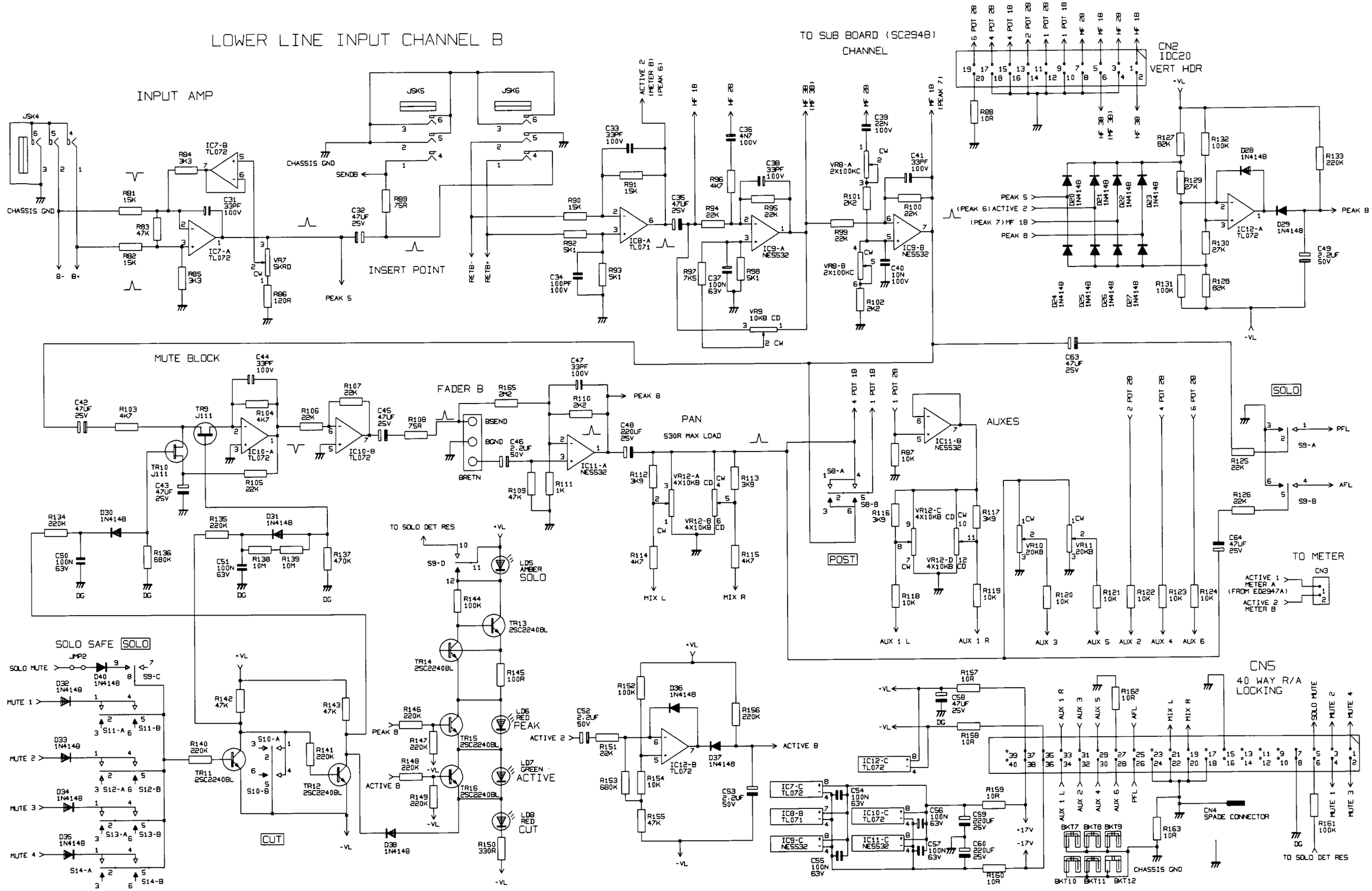

© Soundcraft Electronics Ltd
This drawing must not be copied, reproduced or disclosed, in part or in whole to a third party without written permission

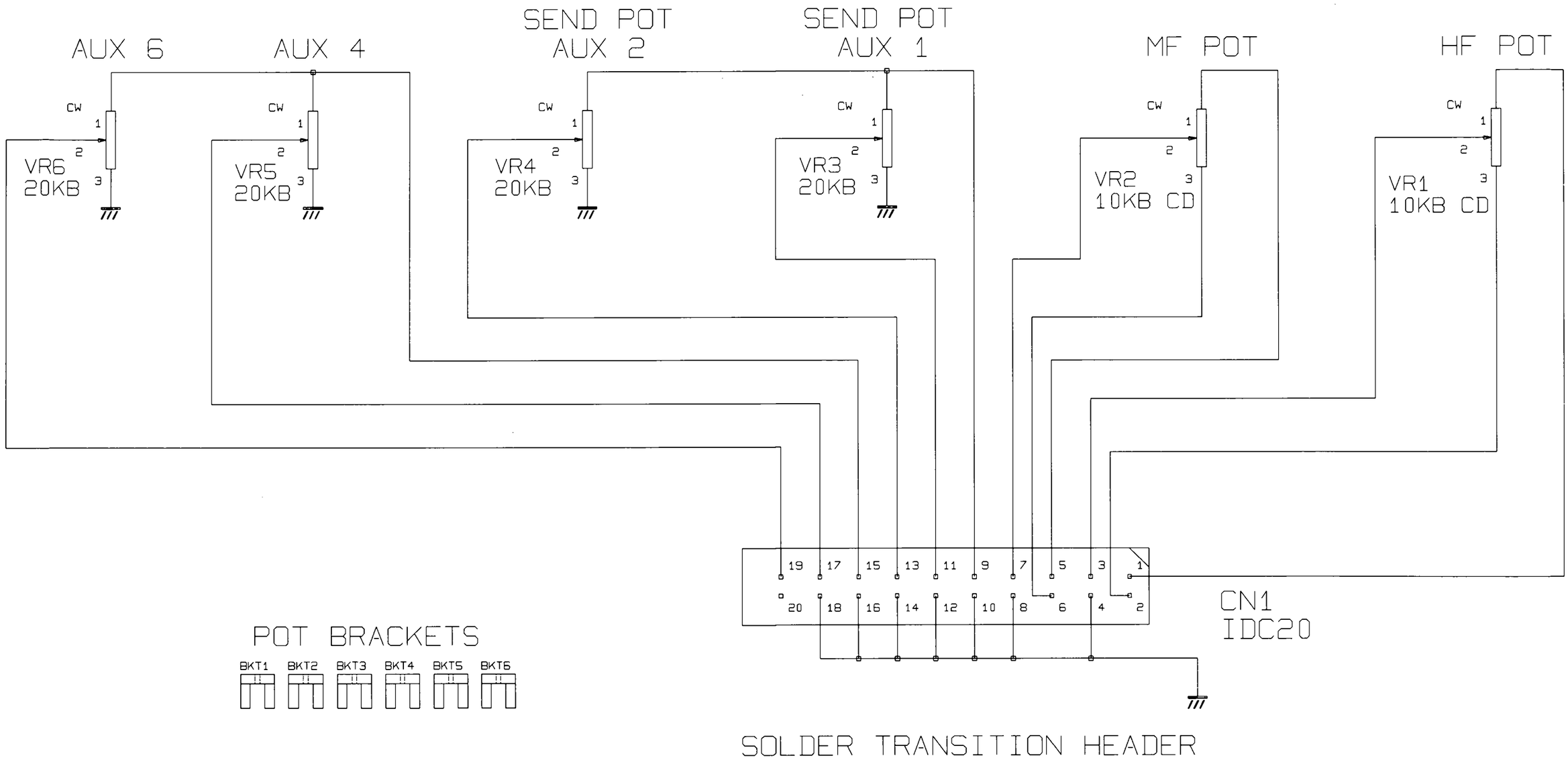

© Soundcraft Electronics Ltd
This drawing must not be copied, reproduced or disclosed, in part or in whole to a third party without written permission

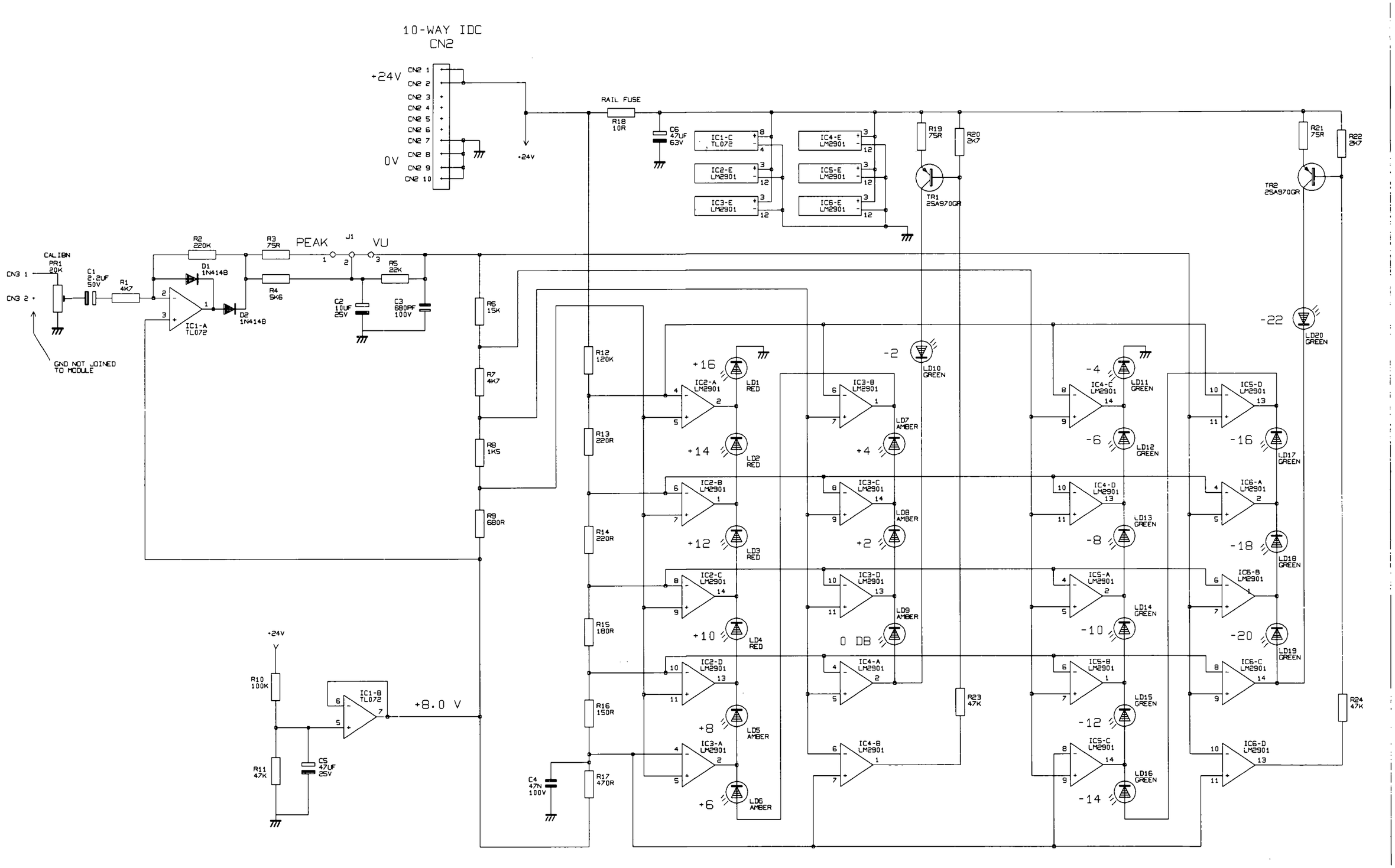

© Soundcraft Electronics Ltd
This drawing must not be copied, reproduced or disclosed, in part or in whole to a third party without written permission

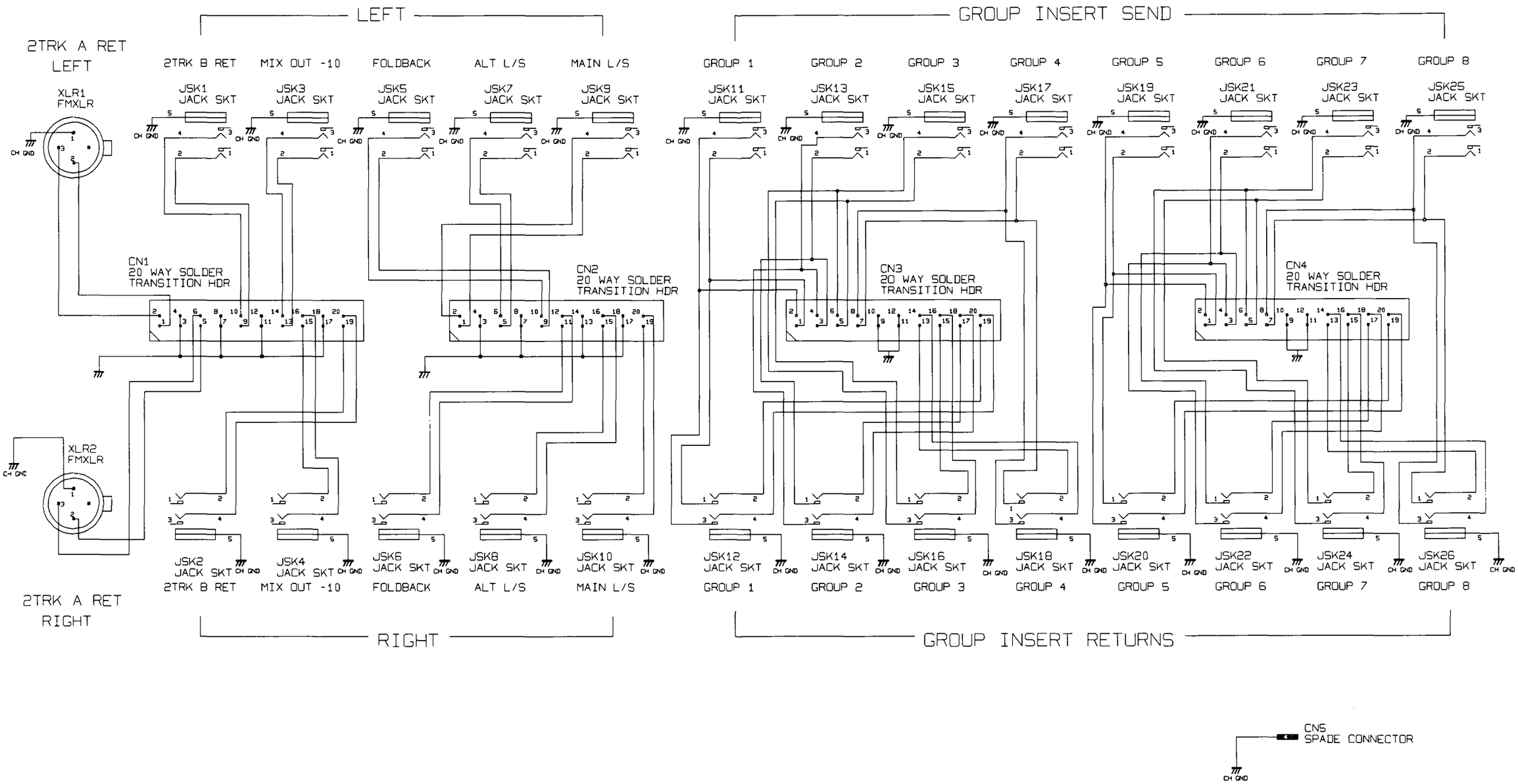

© Soundcraft Electronics Ltd
This drawing must not be copied, reproduced or disclosed, in part or in whole to a third party without written permission

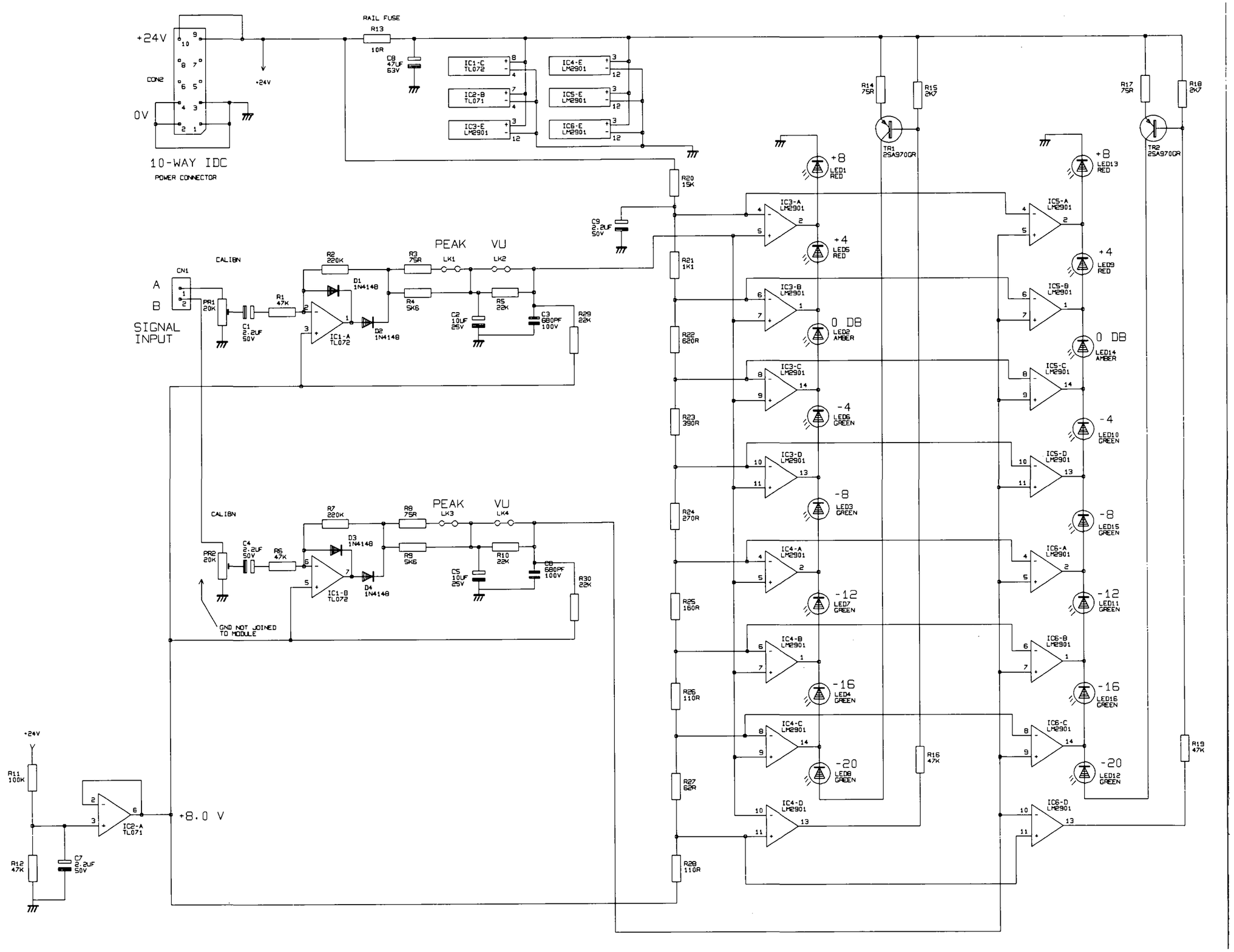

© Soundcraft Electronics Ltd
This drawing must not be copied, reproduced or disclosed, in part or in whole to a third party without written permission

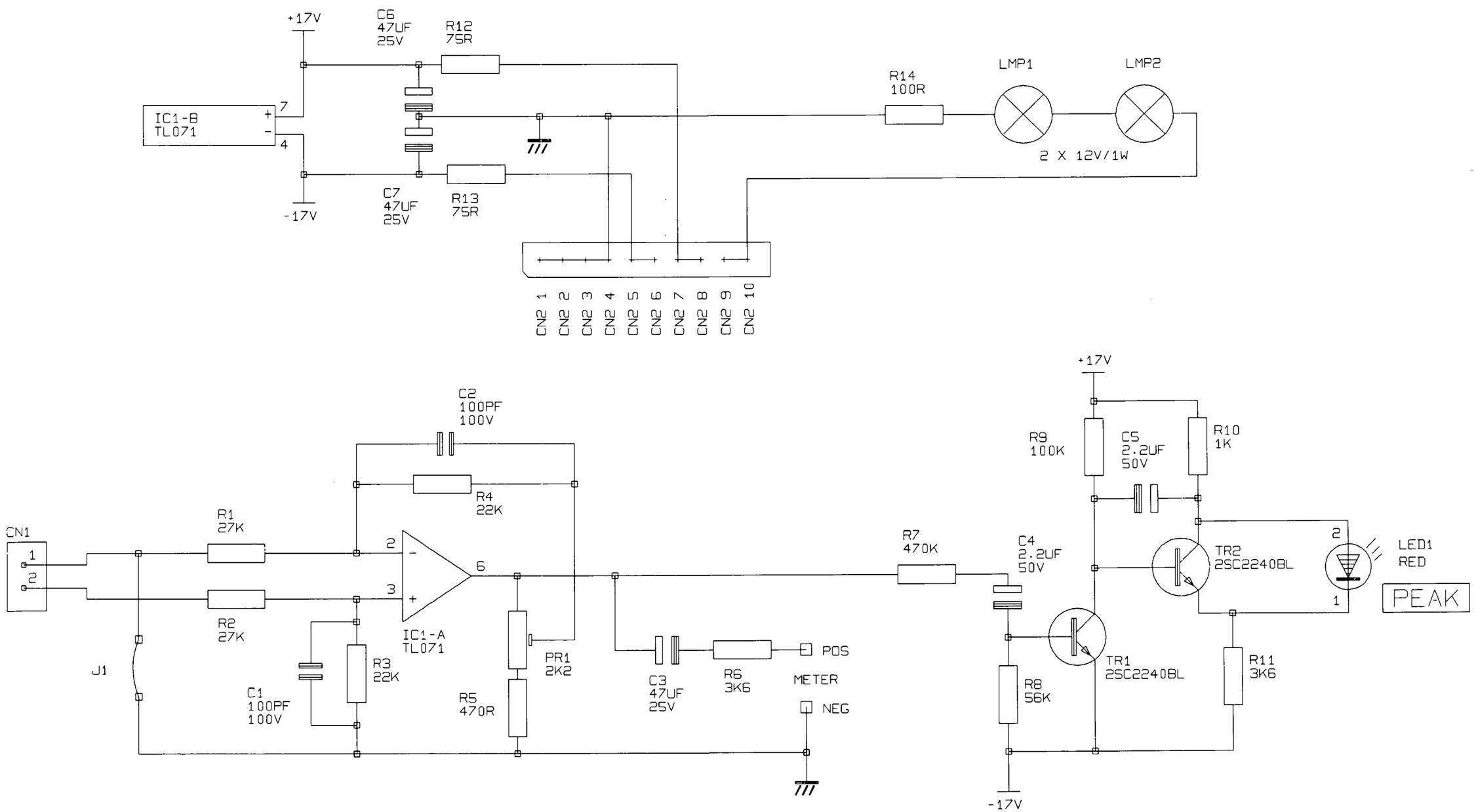

© Soundcraft Electronics Ltd. This drawing must not be copied, reproduced or disclosed, in part or in whole to a third party without written permission.

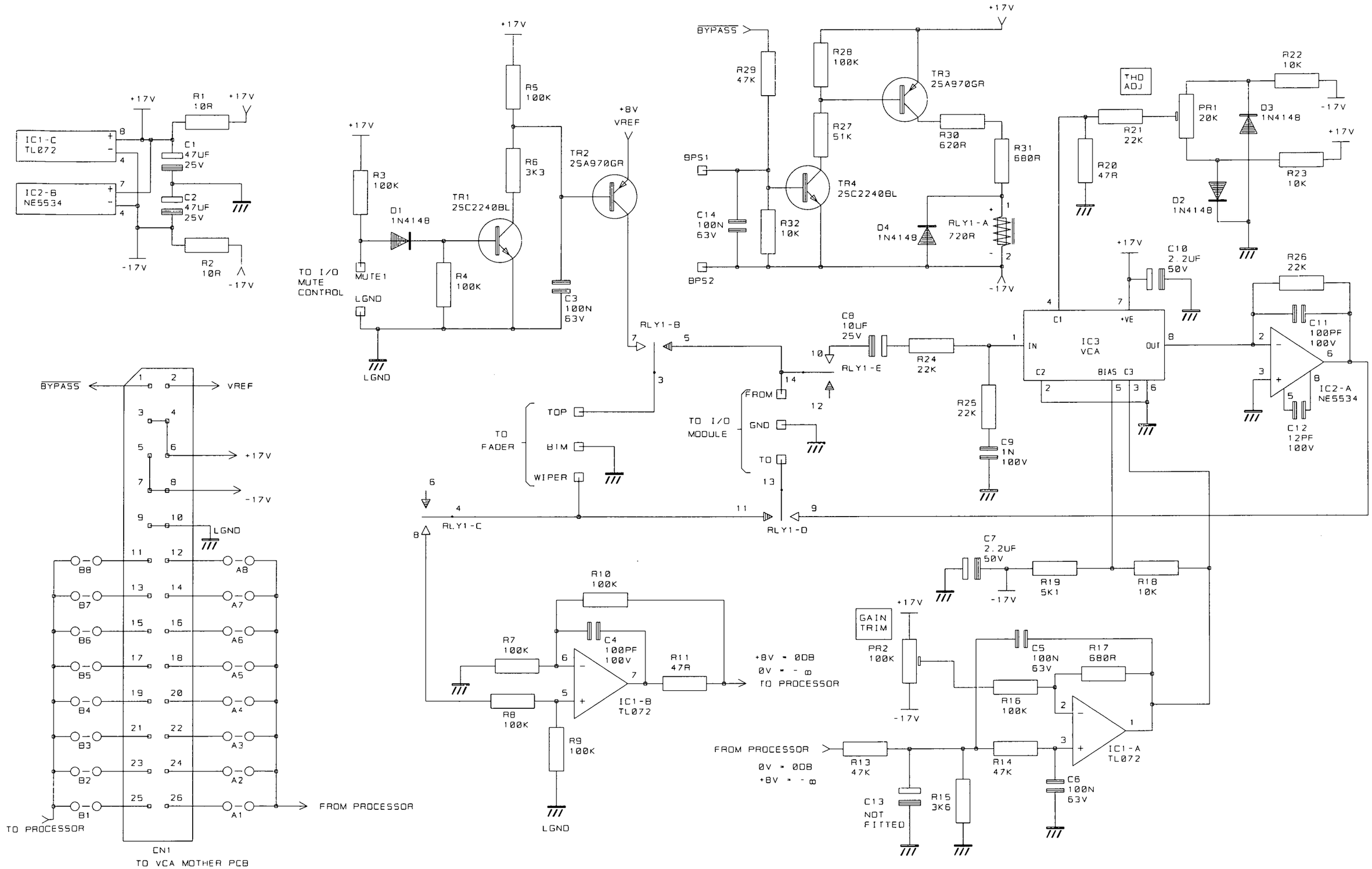

© Soundcraft Electronics Ltd. This drawing must not be copied, reproduced or disclosed, in part or in whole to a third party without written permission.

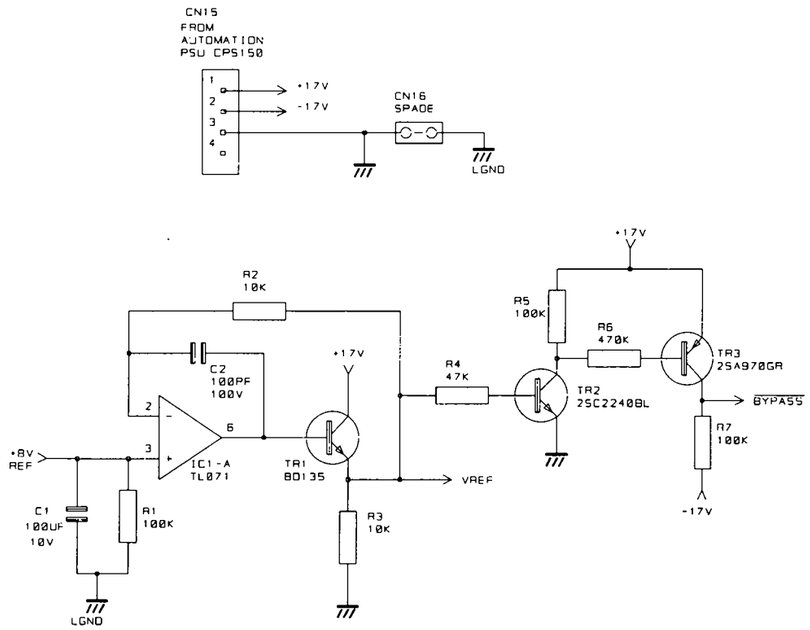

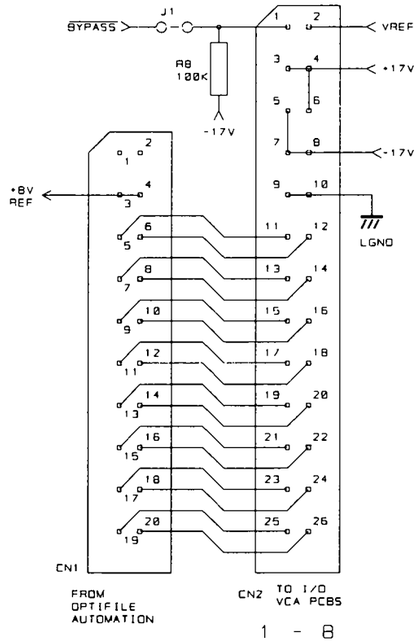

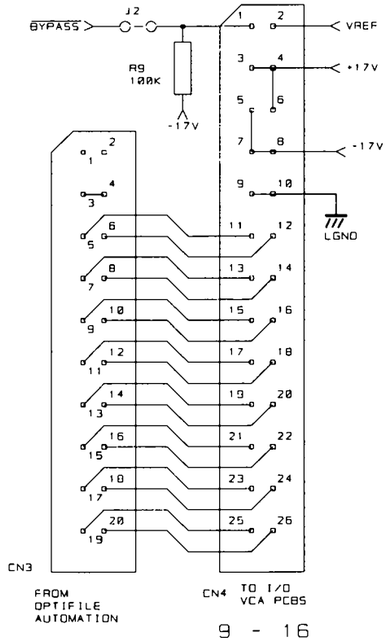

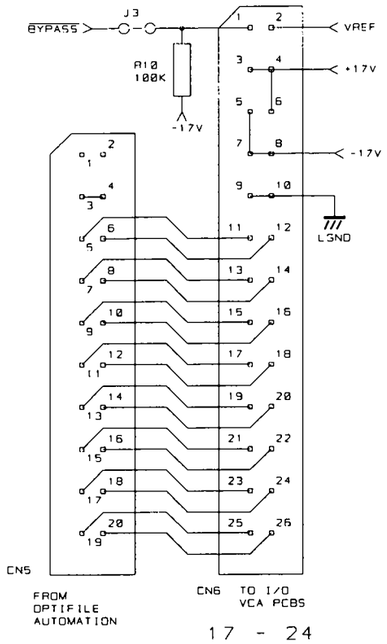

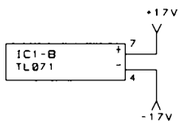

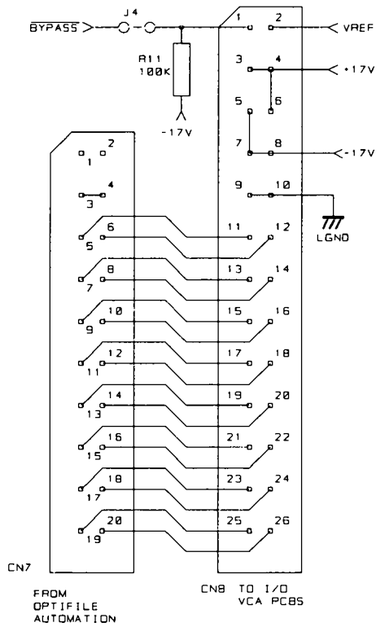

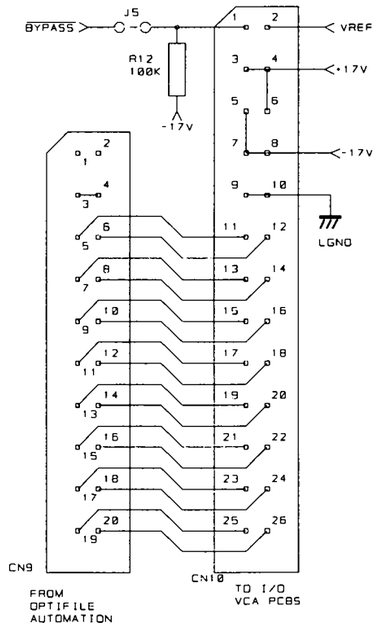

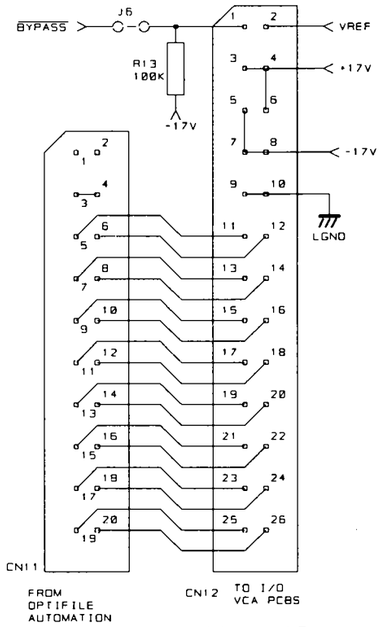

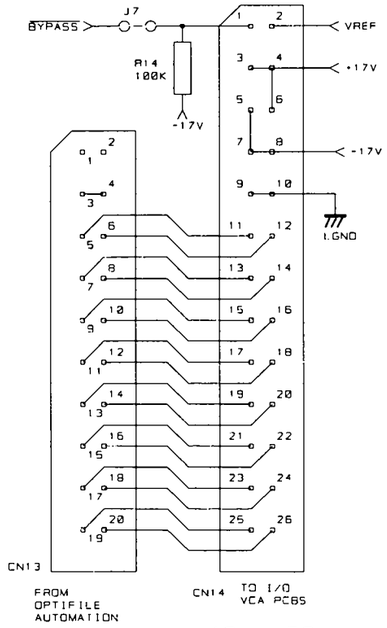

© Soundcraft Electronics Ltd. This drawing must not be copied, reproduced or disclosed, in part or in whole to a third party without written permission.

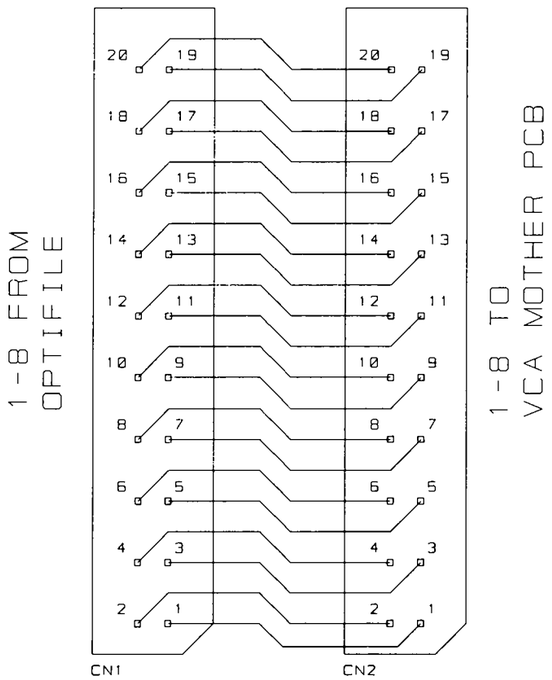

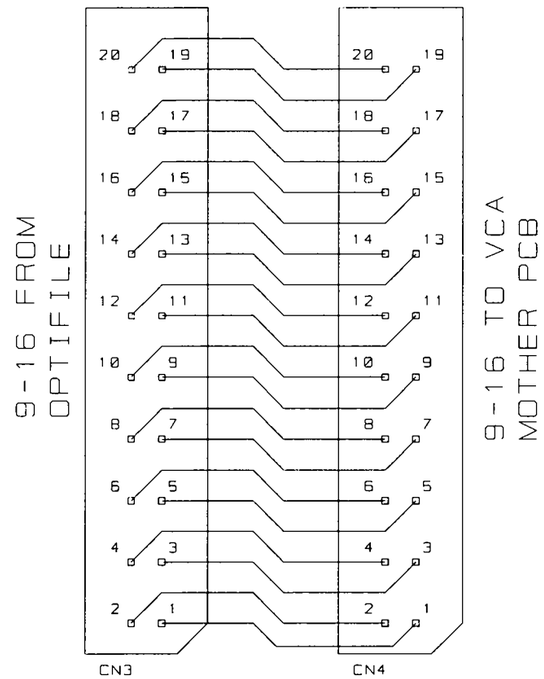

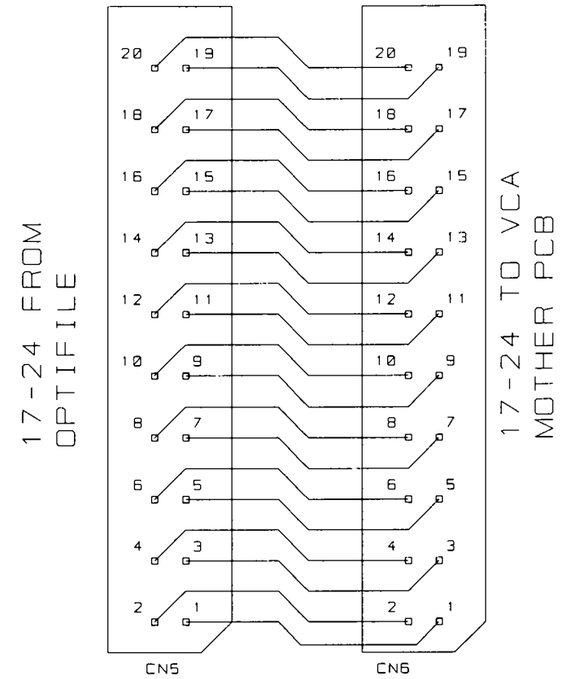

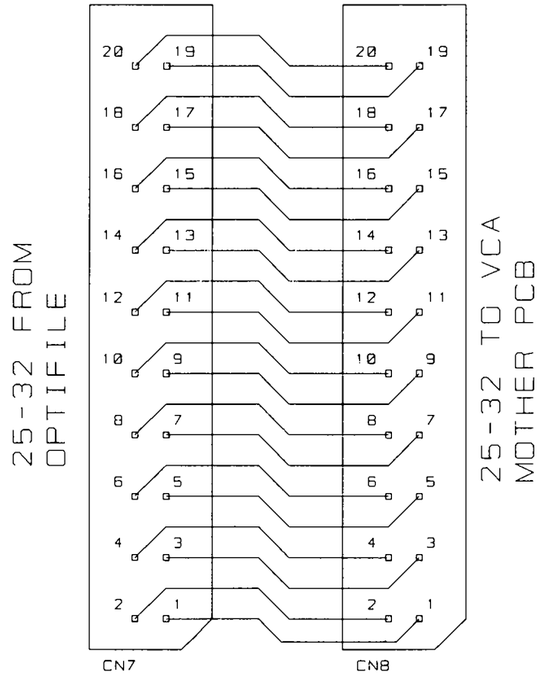

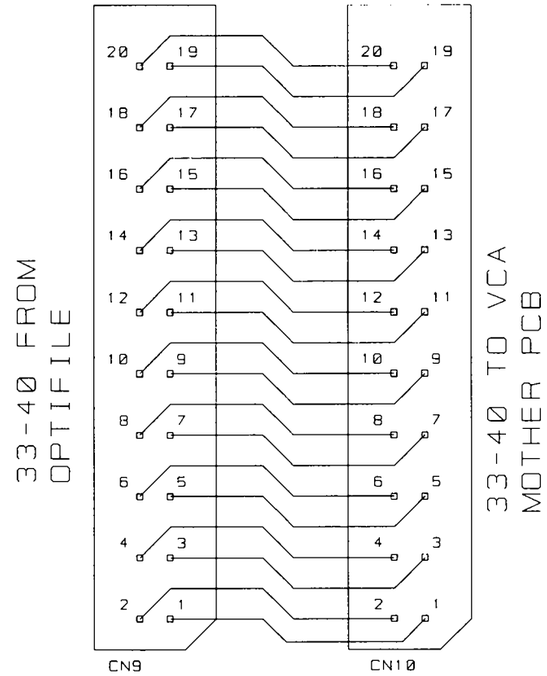
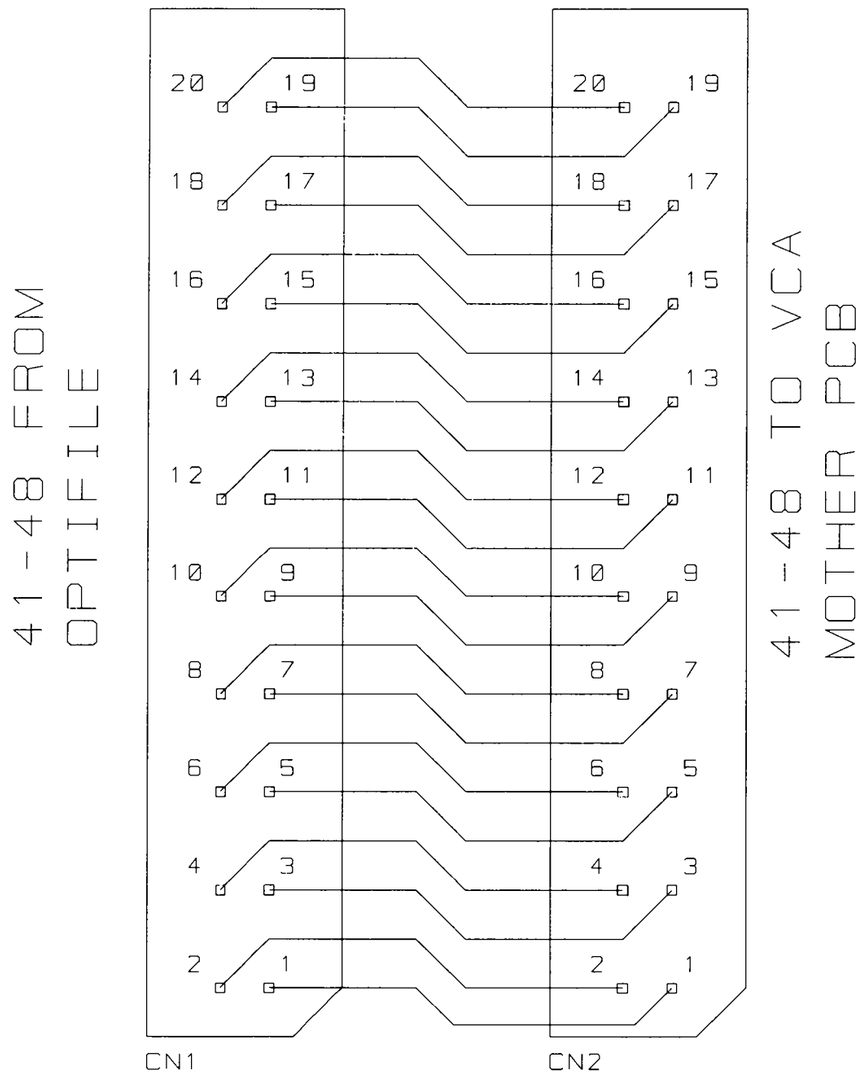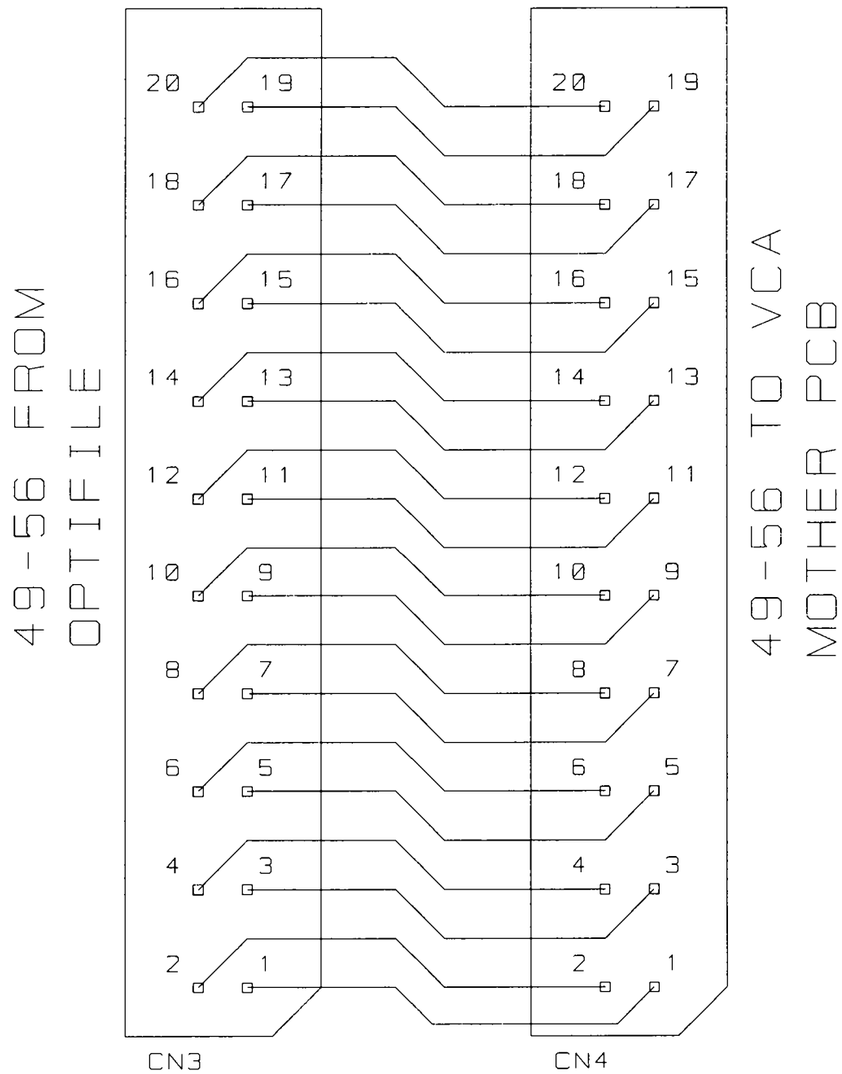
© Soundcraft Electronics Ltd. This drawing must not be copied, reproduced or disclosed, in part or in whole to a third party without written permission.